(For official use only)
(केवल सरकारी प्रयोग हेतु)

सत्यमेव जयते

भारत सरकार

रेल मंत्रालय

GOVERNMENT OF NDIA
MINISTRY OF RAILWAYS

4500 एच पी के उच्च अश्व शक्ति वाले माल ढुलाई एंव सवारी नीमित एसी-एसी डीज़ल इलेक्ट्रिक लोकोमोटिव्स में प्रयोज्य 3-कला प्रेरण मोटरों की तकनीकी विशिष्टि

TECHNICAL SPECIFICATION OF 3Ø INDUCTION MOTORS FOR USE IN FREIGHT& PASSENGER VERSION OF 4500hp HHP AC-AC *DIESEL-ELECTRIC* LOCOMOTIVES

विशिष्टि संख्या चा॰श॰0-2400-52 (संशोधन. -05)

दिसम्बर - 2024

SPECIFICATION No. MP. 0. 2400.52 (REV.- 05)
DECEMBER' 2024

अनुसंधान अभिकल्प एवं मानक संगठन

मानकनगर, लखनऊ- 226011

RESEARCH DESIGNS & STANDARDS ORGANISATION
MANAK NAGAR, LUCKNOW – 226 011

FINAL DRAFT CHANGES

LIST OF AMENDMENTS

SN	Amendment date	Revision	Reason for Amendment
1	June 2008	00	First issue
2	June 2009	1	-
3	July 2013	2	Cl. no. 4: Supply of pinion (included as optional feature) and details of speed sensor & temperature sensor included.
4	May 2021	3	(i) Cl. no. 3 : Indicated frame and frame-less type Traction Motor (ii) Cl. no. 4 : Operating speed and trial speed has been updated as per diagram book. (iii) Cl. no. 5.10 : modified for added Annexures C/2 & D/2. (iv) Cl. no. 5.11 : modified for added Annexures E/2 & F/2. (v) Cl. no. 5.15 : Rating correction (vi) Cl. no. 5.17: Option for use of grease lubricated bearing at DE side (vii) Cl. no. 5.19: Option for terminal box and inclusion of protection sleeve for cables. (viii) Cl. no. 5.22 : Issues in existing TM design and their corrective action. (ix) Cl. no. 8.4 : Format for ~~field~~ performance trial feedback included (x) Cl. no. 8.5 : Inclusion of ISO document QO-D-8.1-11 (xi) Inclusion of amendment history, Index, header and footer. (xii) Clause no. 13 : Government's policy of 'Make in India' included. (xiii) Annexure-C/2 and Annexure-D/2: Speed Torque Characteristics of WDG4D & WDP4D included. (xiv) Annexure-E/2 and Annexure-F/2: Dynamic Braking Characteristics of WDG4D & WDP4D included. (xv) Annexure-O : Type and Routine Test protocol of ACTM included.
5	September 2022	4	"Cl. no. 4.1 : **Evaluation/Qualification criterion**" deleted
6	September 2024	5	(i) Inclusion of Schedule of Technical Requirements (STR) for Manufacturing, Testing and Quality Control (ii) Minor corrections in Cl. No. 5.6, 5.8, 5.19, 5.22, 6.3, 7, 8.1.1, 8.3, 8.5 and 9 (iii) Cl. no. 8.4 : Criteria for prototype clearance modified (iv) Annexure-O :Routine and Type test scheme modified

FINAL DRAFT CHANGES

INDEX

SN	DESCRIPTION	Page No.
	Cover Page	1
	List of Amendments	2
	Index	3
	PART – A	
1	Introduction	5
2	Definitions	5
3	Brief description of the relevant locomotive system	5
4	Scope of supply	6
5	Technical Requirements	6
6	Insulation system	14
7	Technical information, drawing / technical data of TMs	15
8	Tests, Inspection, Trails & Qualification Requirements	15
9	Warranty	17
10	Literature and Maintenance Instructions	17
11	Packing and Marking	17
12	List of Annexures	18 (fr 19 to 52)
13	Preference to Make in India	18
	PART – B	
	Schedule of Technical Requirements (STR) for Manufacturing, Testing and Quality Control	53 to 56

FINAL DRAFT CHANGES

PART – A

TECHNICAL SPECIFICATION OF 3Ø INDUCTION MOTORS FOR USE IN *FREIGHT* & *PASSENGER* VERSION OF 4500hp HHP AC-AC *DIESEL-ELECTRIC* LOCOMOTIVES

FINAL DRAFT CHANGES

1. Introduction: 4000/4500 hp freight & passenger **version of HHP AC-AC *diesel-electric*** locomotives have been manufactured by Banaras Locomotives Works, Varanasi. These locomotives are homed at various diesel loco sheds over Indian Railways. The specification involves the conditions governing successful design, manufacture, testing & supply of the Traction Motors (TMs) used on ***freight*** & ***passenger*** **version of HHP AC-AC *diesel-electric*** locomotives.

2. Definitions:

Throughout this document, the term:
'**IR**' means Government of India, Ministry of Railways, Railway Board, New Delhi or its nominees.
'**BLW**' means Banaras Locomotive Works, Varanasi-221004
'**Inspecting Officer**' means the person, firm or department nominated by IR/BLW to witness tests and inspection of the loco equipment on their behalf or the representative of the Inspecting Officer, so nominated.
IEC means International Electro-technical Commission.
IEEE means Institute of Electrical & Electronic Engineer Inc., USA.
IS means Indian Standards.
B.S. means British Standards.

3. Brief description of the relevant locomotive system: The existing ***freight & passenger*** **version of HHP AC-AC *diesel-electric*** locomotives are provided with a 3-phase AC-AC transmission system. The rectified DC output from the alternator is fed to IGBT-based inverters for synthesis of controlled three-phase output for supply to traction motors of locomotive. In the existing system, the Traction Motors used are ***four-pole three-phase asynchronous induction motors*** from RDSO approved vendors or vendors recommended by RDSO for developmental orders. The IGBT-based inverters are voltage–source PWM inverters inbuilt with IGBT devices. The inverters are equipped with Traction Control Computers (TCC) which control the output from the inverter be fed to traction motor as per the traction demand. All the primary operations and controls of locomotive such as Propulsion control, Excitation control, Brake system, protection and safety controls, etc. including traction control are governed by Locomotive Control Computer (LCC). Based on LCC's information, the TCC achieve the desired traction control for inverter-traction motor combination and communicates to the LCC. The vendors must acquaint themselves adequately with the existing systems in order to offer a technically competent and suitable product. **Annexure - A** shows the sheets for main power schematic of the Locomotive (for both WDG4 & WDP4B Locomotives)

FINAL DRAFT CHANGES

4. Scope of supply: WDG4, ***WDG4D,*** WDP4B ***and WDP4D*** locomotives are equipped with ***six three phase AC*** traction motors. The operating speed of WDG4 ***& WDG4D locomotives is 105 KMPH whereas*** of WDP4B ***and WDP4D*** locomotives is 135KMPH. The trial of the locomotives ***has been*** carried out at a maximum speed of 115KMPH and 150KMPH respectively with new wheel of 1092 mm diameter. The RPM of the motors at these test speeds ***shall*** be well within the ***maximum*** speed (rpm) of the motor.

a) The scope of supply includes three-phase asynchronous induction traction motors for the ***duties*** defined in the specification (excluding roller suspension bearing assembly, bull gear, gear case, speed sensor & temperature sensor).

b) The sensors (temperature & speed) shall be procured along with AC-AC traction system. The mounting arrangement in the TM shall be designed in such a way so as to enable fitment of Temperature and Speed sensors of different makes standardized by IR, sketches of which are furnished at **Annexure – M** & **Annexure-N** respectively. This is to ensure inter-changeability of sensors between various makes of traction motors.

c) **Supply of pinion is optional**. In order to enable procurement of pinion with traction motor, the option of procuring the pinions shall be clearly defined in the offer. ***Vendor*** shall quote separately for the pinion.

Since two different gear ratios are used in HHP locomotives as given below; the ***Vendor*** shall clearly define the quantity of each type.

i. WDG4 ***/WDG4D*** locomotives- 17/90 ratio
(Drg. for the Pinion & Gear is placed at Annexure – J/3 & Annexure – J/4)

ii. WDP4/WDP4B***/WDP4D*** locomotives- 17/77 ratio
(Drg. for the Pinion & Gear is placed at Annexure – J/1 & Annexure – J/2)

5. Technical Requirements:

5.1 Reference site conditions

i. Ambient Temp. - 47 ºC
ii. Inlet air temp. for traction motors - 55 ºC max.
iii. Altitude - 160 meters
iv. Rainfall - Very heavy in certain areas (100% saturation during monsoon in certain areas)

The motor offered shall be designed so as to permit running of locomotive at 5 km/h in a flood water level of **102 mm** above Rail Level (R.L.).

FINAL DRAFT CHANGES

v. Atmosphere during hot weather - Extremely dusty & desert terrain in certain areas.
The TM offered shall be designed to work in coastal areas in humid / salt laden atmosphere.

5.2 Specific working environment conditions related to IR

A. **Vibrations and shocks:** The TM offered shall withstand satisfactorily the vibrations and shocks normally encountered in service and the design shall be suitable for:

i) Max. Vertical acceleration - 2 g
ii) Max. Longitudinal acceleration - 3.5 g
iii) Max. Transverse acceleration - 1.5 g
("g" being acceleration due to gravity)

B. In any case, the vendor must acquaint himself with the track conditions as given below:

1	Gauge	Broad Gauge (BG) - 1676 mm (nominal)
2	Track Structure	The track is to a standard of 60 kg, 90 UTS rails on pre-stressed concrete sleepers of 1660 per km & 300 mm depth of ballast cushion below the sleepers **or** 52 kg, 90 UTS rails on pre-stressed concrete sleepers of 1540 per km & 250 mm depth of ballast cushion below the sleepers.
3	Sharpest curve and turn out to be negotiated	**174m** radius. A locomotive is checked for negotiability in both directions over standard BG 1 in 8½turn out. Vogel's layout **or** it's internationally accepted equivalent for negotiability, throw over at head stock & coupler movement with detail of clearances.
4	Maximum Super-elevation	185 mm
5	Maximum Cant deficiency	100 mm
6	Clearance above the rail Level (R.L.)	The locomotive shall be so designed that no component shall infringe minimum clearance of 95 mm above rail level with the locomotive fully loaded and wheels in fully worn condition.

FINAL DRAFT CHANGES

7	**Permissible track tolerances:**	**BG Main Line**	**BG High Speed Route (C&M-I, Vol-I)**
	Unevenness (3.6m base)	<15 mm	<10 mm
	Twist (3.6m base)	<2.78 mm/meter	<2.08 mm/meter
	Gauge variation	<± 6 mm	<± 3 mm
	Alignment (versine on 7.2m chord)	< 5 mm	< 5 mm
	Gauge widening: On curves of >350m radius	-5 mm to +3mm	
	On curves of <350m radius	Up to +10mm	

The TM offered should be of a rugged design to withstand stresses generated due to vibrations as well any resonance effect arising out of various excitations encountered in traction service. Irrespective of the details indicated **or** required as per this specification, the ***vendor*** shall be responsible for successful operation of the offered TMs in the track conditions on IR.

5.2.1 The traction motor shall be manufactured with the highest standard in accordance with modern manufacturing practices and the design shall be such that the standards followed are known to have worked well in hot & tropical climatic conditions. The TM shall be capable of withstanding transients such as torque & voltage fluctuations and allied conditions caused by stalling & wheel slip under difficult operational conditions.

5.2.2 The following operational and environmental factors shall be specifically kept in view while finalizing the design of the TM offered:

- Operation of the locomotive for longer periods over terrain in which the climate will vary from excessive dry hot at one end to highly humid at the other end **or** during winter months from very cold to moderately warm & humid conditions.
- Operation under a highly dusty environment
- The TM shall be subjected to sustained working at 100% load factor and this should not lead to any harmful effect on the TM.

5.3 The TM offered shall be a four pole three-phase asynchronous motor for transverse installation in the vehicle with output at the drive end.

5.4 **Traction Motor envelope and mounting:** The TM offered shall conform to the outline envelope as existing on the WDG4/***WDG4D/***WDP4B/**WDP4D** bogies such that the roller suspension tube mounting arrangement & dimensions, the dog link / nose suspension mounting arrangement & dimensions, the pinion mounting arrangement & dimensions

FINAL DRAFT CHANGES

and the bull gear mounting arrangement & dimensions shall be same as that of the existing TMs and shall need no alteration. The following drawings are enclosed for the guidance of the ***vendors***, but it is advised that the ***vendor*** shall acquaint himself adequately regarding fitment detail of the motors in use such that the traction motor **offered matches with the existing TMs completely with respect to mechanical interfaces and shall be fully interchangeable mechanically & electrically.**

Annexure G: Bogie drawing
Annexure H: Suspension Tube drawing
Annexure I: Framed traction motor and Frameless Traction motor for WDG4/***WDG4D/***WDP4B**/WDP4D**
Annexure J: Pinion & Gear drawing
Annexure K: Gear Case drawing

5.5 The provision for lifting the TM by a crane as well as dropping it in a drop pit for installation on the bogie / removal from the bogie shall be clearly indicated and illustrated in the outline and general arrangement drawing to be submitted alongwith the offer.

5.6 The TM offered shall be of an essentially high-voltage / low current compact design, given that the weight of the TM offered (excluding roller suspension bearing assembly, gear box, gear and pinion) shall ~~not exceed **2125 kg**~~ be **2120±2%.**

5.7 The rating plate of traction motor shall be marked with essential parameters like power rating, rpm, operating voltage, frequency, current (max. values), type of the motor, class of insulation, make, sl. no. & year of manufacture of the motor, etc.

5.8 **Interchangeability:** The offered traction motor shall be completely interchangeable with the existing motors in use on WDG4**/WDG4D/**WDP4B ***& WDP4D*** locomotives and the ***vendor*** shall acquaint itself with these existing motors for making a competent offer. The gear and pinion ratio employed on WDG4***/WDG4D*** locomotives is 90:17 and for**,** WDP4B & ***WDP4D*** locomotives ***is*** 77:17 and the same shall be retained with these TMs.

The ***vendor*** shall also ensure that the offered motor is compatible with all the makes of Traction Control Converter (TCC) & Locomotive Control Computer (LCC) being used by IR. This compatibility may be ensured by IR during the mandatory ~~field~~ performance trial laid down in Clause 8.4 of this specification. However, if such an incompatibility is found at a later date (from date of approval of prototype), the firm shall be liable to replace / rectify the motors to ensure compatibility.

5.9 **Tractive Effort and Adhesion Requirements:** The traction motors in WDG4 locomotive is electrically capable of providing a maximum starting tractive effort of 540KN. The adhesion control system is capable of providing high adhesion through wheel slip control system which is microprocessor based. The starting adhesion rating

FINAL DRAFT CHANGES

of the locomotive in dry and sanded condition is in the region of 41% for a single locomotive. The equipment offered by the vendor shall be designed to meet all these conditions without vitiating any performance standard given that the de-rating protocol of the WDG4**/WDG4D/**WDP4B ***& WDP4D*** systems as governed by the locomotive/traction computers is as under:

Temperature	Action taken by LCC
200	Reduction to maximum continuous torque level of that Loco
215	Reduction to TH4 level torque
230	Shut down of inverter
240	Interpreted as a failed sensor

5.10 **Performance requirement:** The rectified output from the alternator-rectifier system of the locomotive is the input to Inverter + Traction Motor assembly of the locomotive. TE Vs Speed characteristics of the 4500hp locomotive is given in **Annexure –C/1 & C/2** for WDG4 & WDG4D and **Annexure –D/1 & D/2** for WDP4B & WDP4D**.** The TM offered shall be so designed such as to match **or** excel these TE Vs Speed output curves.

5.11 **Braking performance:** The Invertor + TM assembly is also employed for generating dynamic braking for the locomotive. The BE (Braking effort) Vs Speed characteristics of WDG4 & WDG4D locomotive is placed at **Annexure – E/1 & E/2** and for WDP4B & WDP4D locomotive at **Annexure – F/1 & F/2.** The TM offered shall be so designed such as to match **or** excel these characteristics. The details of existing DBR + Blower assembly of WDG4**/WDG4D/**WDP4B ***& WDP4D*** locomotive shall be provided to the vendor.

5.12 The traction equipment test schedule followed by IR is given below for guidance.

Equipment	**Test Specification**
Traction Motor	IEC 60349-2

The vendor shall provide corresponding test procedures followed for type and routine / production testing of the motor offered. The test procedures so provided should be equivalent to the specifications mentioned above and fully compliant with the design specifications. In case of any deviations, the same should be indicated for consideration of IR.

5.13 The locomotive shall be working under 25 kV, 50 Hz OHE systems also. The harmonics generated by the system should not affect signaling like audio frequency track circuits and axle counters which work in the range 0-5 kHz with a limit of 400 mA. The psophometric voltage induced on communication circuit running by the side of track should not exceed 1 mV.

FINAL DRAFT CHANGES

5.14 Locomotive is equipped with "bogie cut-out" facility so as to isolate defective traction inverters individually **or** ~~a~~ defective traction motors in group~~s~~ of three. This feature requires that the TM be designed to cater to 20% continuous overload capability.

5.15 **Rating:** The TM offered shall be designed to meet all the performance and test standards contained in **IEC 60349-2** and the broad ratings of the motor are given below:

Parameter	Value
Nominal starting torque	9500 Nm
Maximum continuous power according to IEC 60349-2 at motor shaft with DC link voltage of 2600V.	630 KW min at 1460 rpm
Maximum continuous power according to IEC 60349-2 at motor shaft at rated voltage.	485 KW min at 685 rpm (20% additional for bogie cut-out)
Maximum current (RMS value of fundamental wave)	270A
Maximum permissible speed	3320 rpm
Inverter Frequency Maximum	120 Hz
Circuit	Y
Supply conductor	70 sq.mm
Insulation Class	Class 200
Electrical Characteristics	Must match the existing traction motor such that there is complete compatibility with the existing locomotive and traction equipment particularly the TCC / LCC and there is no need for any change in the relevant OEM software.
Temperature Index of Insulation System (TI)	210-220 (As per IEC60349-2, Temperature at which extrapolated life of 20,000 hour is obtained). IEC 60034-18 to be read along with special stipulations in this specification at Clause 6. Maximum allowed temperature rise of winding is TI-70°C at rated load of 425kW of 30 years of operation.

5.16 **Suitability of operation with IGBTs and allied conditions:** Considering the higher switching frequency of IGBTs and also the instances of torque pulsations arising out of imperfections in waveform at higher loads, the vendor shall confirm suitability of the TM offered for such a service. The TM shall operate over the entire range of loading with ripple / harmonic current imposed from the supply system (comprising of alternator, rectifier & inverters) both during motoring & braking conditions. The manufacturer has to establish the compliance with this requirement.

FINAL DRAFT CHANGES

A write-up indicating the system adopted to achieve this shall be submitted by the firm.

5.17 **Bearings:** Use of following Bearings from RDSO approved vendors as per RDSO vendor directory is recommended:

Drive-end bearing	Cylindrical roller bearing DIN 43283-N332-ECM-SRL340-370-VA309 (oil lubricated/electrically insulated)
Non-drive bearing	Deep-groove ball bearing DIN 43283-6326-M/C5-VA309 (grease lubricated/ electrically insulated)

Note: In case, motor manufacturer intends to use grease lubricated bearings at Drive End side or bearings equivalent to that indicated above, clearance from RDSO shall have to be taken.

5.18 **Ventilation:** The forced air-cooled ventilation to be available in the existing traction motor is as given below:

Driving mode (Throttle 8, 950 engine rpm):	Q = ρ x dV/dt = 1.32 kg/s, e.g. at ρ=1.2 kg/ m^3, an air stream of 1.1 m^3/s is available. (Static C/pressure at TM inlet: approx. 2000 Pa)
Braking mode (DB4, 572 engine rpm):	Q = ρ x dV/dt = 1.03 kg/s, e.g. at ρ=1.2 kg/ m^3 an air stream of 0.86 m^3/s is available.

The level of cooling air available shall be as indicated above, it being understood that the mechanical design of the motor offered should have no major departure from the existing traction motors, unless otherwise specified / permitted. The cooling air is filtered through inertial filters.

The motor shall be designed to work satisfactorily at reduced air supply of upto 5% than the above specified value. It is to be noted that under these conditions of reduced air supply, no major modifications are required in the locomotive.

5.19 **TM Power Cables:** The TMs shall have elastomeric cable hangouts with bolted connectors to the under frame cables conforming to the following details:

Cable length: 90 inches (2286mm) from edge of first tapping pad on the housing to end of the lug.

Cable type: Power cable of 1.8kV of Proven make conforming To EN50264-3-1. ~~To confirm to Sienocopy 120 (N) HXSGAFHXO 1.8kV~~.

Cable size: 70 mm^2

Cable coding: Cables of the TM shall be labelled "U", "V" and "W" at motor side. Color coded heat shrinkable tubing shall be used to identify each cable as follows:

U: red
V: white

FINAL DRAFT CHANGES

W: blue

Additional sleeves shall be provided to protect cable insulation damage. Vendor may seek for provision of terminal box furnishing details/drawings to RDSO for prior approval with assurance of its non-infringement while motor mounting and ease of maintenance. In respect of the cable type, no deviation shall normally be permitted. However, any deviation, if proposed by the vendor shall be brought out clearly for evaluation.

In any case, a vendor shall not employ any deviation without approval from RDSO.

5.20 Painting: The TM shall be painted in three layers as follows:

- **Primer coat**
  EPO basic color RAL 3012, hardener 19-0411-100.032, thickness: 0.03 mm.
- **Intermediate coat**
  PUR intermediate primer, black, PUR hardener PH-633-0589/11, thickness: 0.06 mm.
- **Top coat**
  EPO top coat HYDRO RAL 9011, hardener 45, thickness: 0.03 mm.

This is a well-established scheme and any deviation, if proposed by the vendor shall be brought out clearly for evaluation. In any case, a vendor shall not employ any deviant scheme without approval from RDSO. Alternative scheme may be offered subject to approval of RDSO/BLW.

5.22 Earlier, the TMs in service, suffer from the following problems against which following modifications have been introduced by manufacturers/RDSO. The manufacturer should take the cognizance of these suggested modifications during design of the prototype.:

S.N.	Issues	Corrective Action
1	Breakage of rotor bars	• Shortening the rotor bar overhang; • use of lighter material for short circuit ring; • change in cross section of rotor bar
2	Breakage of aluminum end shields of NDE side & Elongation of holes in the end shields	• Material changed to Spherozoidal Steel grade
3	Occasional problem of mismatch/ chocking in drive-end bearing oil path leading to leakage of oil (Mainly a manufacturing defect)	RDSO Mod sheet no. MP. MOD.EM.01.05.16 (Rev. 00) August 2016
4	Stator winding damage due to vibration	• Increased the number of

FINAL DRAFT CHANGES

		clamps/bracket from 7 to 12 ~~of appropriate length~~ • fiber ring of higher cross-section • Reduced stator winding overhang

The vendor shall study these failures and indicate whether any design improvement has been incorporated in their offer. In any case, the broad design of the rotor bar and it's fitment in the rotor slot as well end ring and the overhang should be submitted along-with the offer for evaluation of its reliability etc. as failure of rotor bars is one of the major problems faced on the existing motors.

6. Insulation system:

6.1 A proven insulation system shall be employed in construction of traction motor windings having TI not less than 210 (preferably 220). Before the commencement of supplies, the manufacturer shall need to furnish the copies of results of the temperature rise of the motors. The basic insulation system used shall be similar to the Silicone solvent-less impregnating resin based scheme employed in the existing TMs, which is optimized for operating at tractive effort, current and voltage levels that are above the levels detailed in this application with an adequate margin.

6.2 **Thermal Index:** Imperviousness to moisture and insulation ageing tests of the insulation system has to be done according to IEC 60034-18 and IEC 60727-1, which includes subjecting the test models to humidity, high temperature, vibrations and high potential. Various ageing parameters such as heat, vibration, mechanical / compressive stresses, special environmental effects of humidity, dust, metallic dust from brake shoes etc. shall be incorporated to simulate actual working conditions as closely as possible. The temperature at which an extrapolated life of 20,000 hours is obtained shall be treated as the thermal endurance limit (Temperature Index or **TI**) of the insulation system. Alternatively, determination of thermal index shall also be done broadly in line with the OEM's procedure illustrated at **Annexure-L.** The temperature rise of the TM during type / routine tests shall be linked with the TI of the insulation system so determined, which shall be adjusted suitably for the ambient temperature (47ºC) and hot spots. All the relevant details, including the test method & test results (if already done on the TM offered or a TM similar to the one offered employing an identical insulation scheme) and the temperature rise limits worked out after adjustment given above, shall be furnished with the offer. In case such an evaluation has not been done, the vendor shall confirm that these details shall be submitted on placement of order and before type testing is undertaken.

6.3 A special requirement is that the 'hot spot' temperature in stator winding shall not exceed the average of the temperature by more than 25ºC for the endurance test. Establishment of this condition may require generally a special test to be done on the

FINAL DRAFT CHANGES

traction motor during type ~~/ routine~~ testing; the vendor shall indicate as to how they propose to establish this.

7. **Technical information, drawing / technical data of TMs**: The vendor shall furnish following information / data and drawings before the same is inspected for ~~field~~ performance trials.

Technical information: Characteristics of the TMs offered shall be furnished as given below:

- Motor efficiency Vs Motor RPM
- Torque Vs Motor RPM
- RMS Voltage Vs Motor RPM
- RMS Current Vs Motor RPM
- Power Factor Vs Motor RPM.

Technical Data / Drawings:

- Designed rating of the offered motor in terms of voltage, current, HP (in KW at rated voltage)
- Class of Insulation
- Insulation scheme of stator winding
- Outline longitudinal and cross sectional drawings of the motor
- Outline General Arrangement (OGA) drawing, fitment details / mounting arrangement etc.
- Steps taken to prevent rotor bar cracks.

7.1 **Infrastructure Detail:** Machinery & plants (M&P) installed in the vendor's works for manufacture and testing of the proposed equipment along with design / testing facilities available shall be listed out in the offer.

Apart from the above, vendors shall submit all other information considered relevant by IR for successful execution of the contract. The format for such information shall be decided mutually between IR and the vendor.

8. **Tests, Inspection, Trials & Qualification Requirements:**

8.1 **Type Tests:** Type tests of the motor shall be done as per **IEC 60349-2**. The practice followed by IR is to adhere to these tests with special stipulations in respect of reduction of temperature rise limits due to higher ambient conditions in India. However, if the vendor utilizes a different test scheme, the same can be examined by RDSO on provision of this alternative test procedure, provided the same is also internationally accepted for TMs. Vendor shall submit detailed Type / Routine test plan to RDSO for approval. The vendor must have in-house facilities to conduct these tests and has to submit alongwith their offer, the details of such facilities available with them.

FINAL DRAFT CHANGES

8.1.1 In case, the traction motor offered has been employed on traction duty successfully in WDG4/WDG4D/WDP4B/WDP4D locos (in the ~~part~~ past), type test requirement can be waived off by RDSO subject to submission of the said type test results by the vendor to RDSO for the latter to examine and satisfy themselves in respect of suitability of the tests and it's results. In case, the motor is being offered for the first time for application of WDG4**/WDG4D/**WDP4B/***WDP4D*** locomotive, the complete type test of the TM **or** part thereof shall be witnessed by RDSO/BLW representative(s) at the premises of the firm. The vendor must have in-house facilities to conduct these tests and has to submit the details of such facilities available with them along-with their offer.

8.2 **Routine Tests:** Routine tests of the motor shall be done as per **IEC 60349-2.** The practice followed by IR is to adhere to these tests with special stipulations in respect of reduction of temperature rise limits due to higher ambient conditions in India. However, if the vendor utilizes a different test scheme, the same can be examined by RDSO on provision of this alternative test procedure, provided the same is also internationally accepted for TMs. Routine tests shall normally not be witnessed by IR representative(s) at the premises of the firm but IR reserves the right to witness such tests on sampling (or specific need) basis.

8.3 **QAP and Inspection Plan:** The vendor should have a well-defined Quality Assurance Plan (QAP) of the product offered by him. ~~He will furnish~~ A copy of such QAP ~~documents~~ as per RDSO's standard format advised at Annexure-A7 of ISO Document no.: QO-F-8.1-7 Version No.: 1.8 or latest shall be furnished along with his offer. If the vendor proposes to obtain sub-assemblies / components / material from a sub-contractor, duly approved QAP documents of sub-contractor shall also be submitted by the vendor. The QAP shall also include test procedure / standards and acceptance limits followed during stage manufacturing of TMs. The submitted QAP will require approval of IR. A test protocol in line with **Annexure – O** for prototype testing / routine testing of the offered motor at the firm's premises shall be submitted by the vendor for approval by IR.

8.4 **Fitment and Performance Trail for Prototype Clearance ~~Field trial~~:** A vendor, who has offered the traction motors for application for the **first time**, shall supply **03 prototype motors** which will be fitted on a locomotive along with 03 existing ~~(OEM make)~~ motors of approved/developmental vendor. These TMs will be tested in actual operation for at least 3 months~~. Upon successful field trial of these TMs, further clearance shall be given for supply of **06 more** TMs which will be subjected to a further field trial of upto 6 months on a single locomotive.~~

Clearance for further supply of the ordered quantity (of TMs) shall be given after successful ~~field~~ performance trial detailed above. ~~For this, field~~ Trial performance feedback shall be obtained in following format:

Shed/Z. Rly.	Loco No.	TM Sl. No.	Make	DOC	DOF	Cause of failure *	Remarks

FINAL DRAFT CHANGES

* Failure data downloaded from equipment/system (if available) should be invariably made use of.

In case, the behaviour of the motor is not found suitable as per IR requirements, the vendor at his cost may incorporate changes in the traction motors, ~~and~~ which shall be subject to further ~~field~~ performance trial of 3 months as stipulated above ~~in each case~~ (**or** as decided by IR). The firm shall obtain permission for the proposed modification from IR. May also refer Clause 5.8 of this specification.

8.5 **Qualification required for approval:** As per RDSO's ISO Guidelines. ~~After successful prototype testing and field trials evaluation, the firm shall qualify to supply the TMs in restricted numbers till qualifying quantity laid down by IR is achieved. Regular supplies of TMs may be accepted on submission of the work test certificate (WTC) to BLW after approval of the firm as developmental vendor.~~

~~IR reserves the right to carry out any test at firm premises for clearance /qualification of TMs for further supply. In such cases the WTC will not be valid for acceptance of the TMs and the motors will be cleared based on the report submitted by the IR representatives. For any modification in design/manufacturing, prior approval from RDSO shall be taken.~~

~~All the provisions contained in RDSO's ISO procedures laid down in Document No. QO-D-8.1-11 dated 01-07-2020 (titled "Vendor – Changes in Approved Status") and subsequent versions/amendments thereof, shall be binding and applicable on the successful vendor/vendors in the contract floated by Railways to maintain quality of products supplied to Railways.~~

9. **Warranty:** The supplier shall offer warranty against any manufacturing defects noticed on the equipment offered for a period not less than two years from the date of commissioning or 30 months from the date of supply, whichever is earlier. Any damage or unsatisfactory performance on the TMs/components due to design or manufacturing inadequacies noticed during the above ~~field~~ trials or during the warranty period shall be rectified /replaced by the firm free of cost. If 20 % of the motors fail during the first 2 years (warranty period) for a particular reason, this would be considered as a design inadequacy and the firm shall make modification in the balance motors (apart from rectifying failed motors) to prevent further failures. In such cases the warranty may be extended after modification with mutual consent between the supplier and IR.

10. **Literature and Maintenance Instructions:** The approved supplier shall supply sufficient copies of manuals for complete motor maintenance and overhaul.

11. **Packing and Marking:** All the equipment offered shall be suitably packed to prevent transit damage. The packing shall be marked with:

- Motor Type Number:
- For Loco Type:

FINAL DRAFT CHANGES

- BLW order number:
- Manufacturer name:
- Year of Mfg.

12. List of Annexures:

Annexure A	Sheets for Main Power Schematic for 4500 HP /WDP4B/WDP4D& WDG4/WDG4D Locomotives.
Annexure B	Pictorial view for mounting location of speed sensor in existing TM
Annexure C	TE Vs Speed curve WDG4 & WDG4D(4500 HP)
Annexure D	TE Vs Speed curve WDP4B &WDP4D(4500 HP)
Annexure E	BEVs Speed curve WDG4 & WDG4D(4500 HP)
Annexure F	BEVs Speed curve WDP4B &WDP4D(4500 HP)
Annexure G	Bogie drawing.
Annexure H	Suspension Tube drawing.
Annexure I	Framed Traction Motor (at Annexure-I/1) & FramelessTraction Motor (at Annexure-I/2) for WDG4/***WDG4D/***WDP4B**/WDP4D Loco**
Annexure J	Pinion & Gear drawing.
Annexure K	Gear Case drawing.
Annexure L	Flow chart for determination of thermal units.
Annexure M	Sketch of Temperature sensor to be supplied alongwith AC-AC traction system.
Annexure N	Sketch of Speed sensor to be supplied alongwith AC-AC traction system.
Annexure O	Type and Routine Test protocol of AC Traction Motor

13. PREFERENCE TO MAKE IN INDIA

The Government of India policy on 'Make in India' shall apply.

FINAL DRAFT CHANGES

ANNEXURE- A

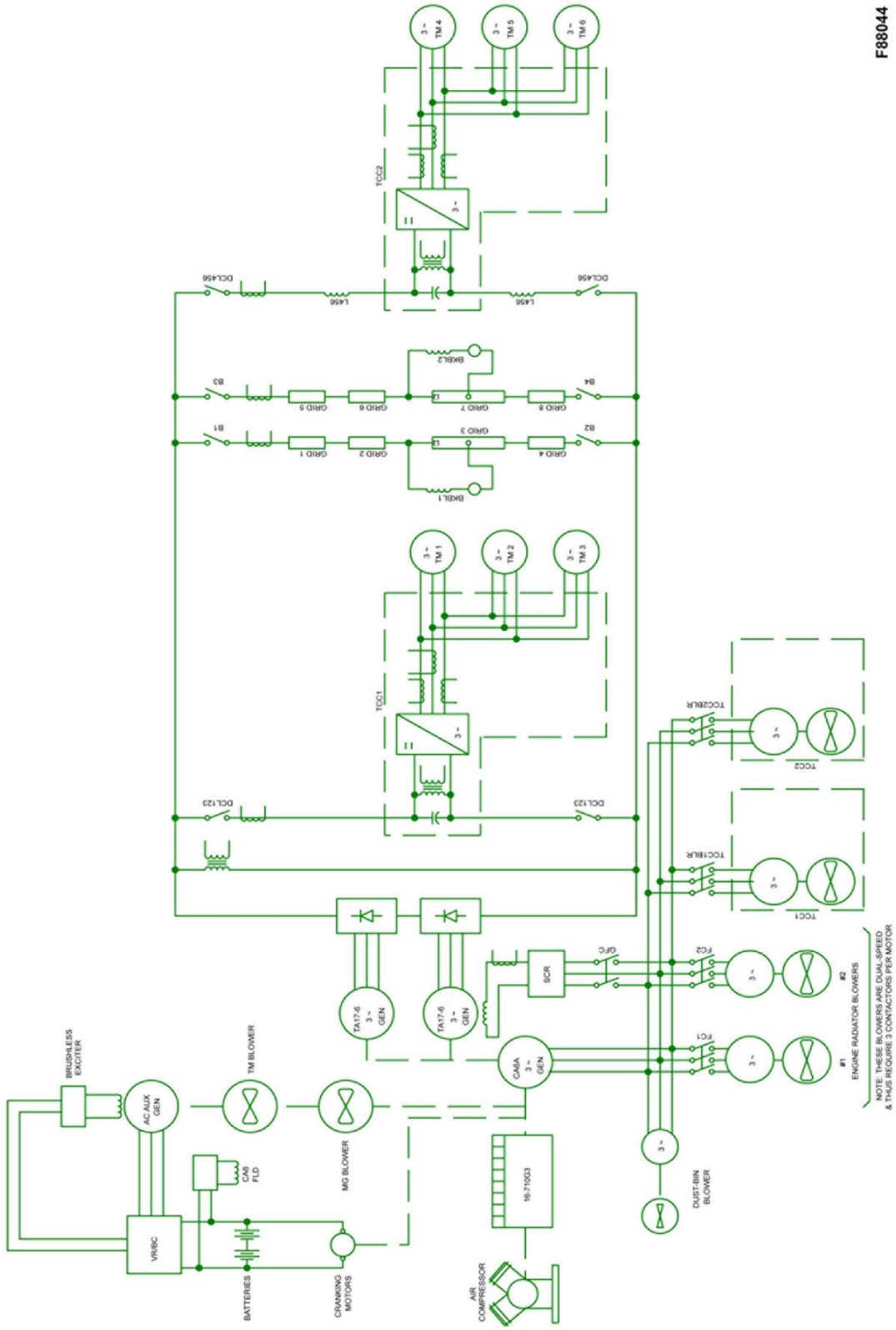
F88044
3~ TM 4
3~ TM 5
3~ TM 6
TCC2
DCL456
L456
BKB L2
B5
B4
GRID 5
GRID 6
GRID 7
GRID 8
B1
B2
GRID 1
GRID 2
GRID 3
GRID 4
BKB L1
3~ TM 1
3~ TM 2
3~ TM 3
TCC1
DCL123
TCC2BLR
TCC1BLR
TCC2
TCC1
TA17-6 3~ GEN
SCR
GFC
FC2
FC1
CA6A 3~ GEN
#2
#1
ENGINE RADIATOR BLOWERS
NOTE: THESE BLOWERS ARE DUAL-SPEED & THUS REQUIRE 3 CONTACTORS PER MOTOR
BRUSHLESS EXCITER
AC AUX GEN
TM BLOWER
MG BLOWER
CA6 FLD
VR/BC
BATTERIES
CRANKING MOTORS
16-71003
AIR COMPRESSOR
DUST-BIN BLOWER

ANNEXURE - B

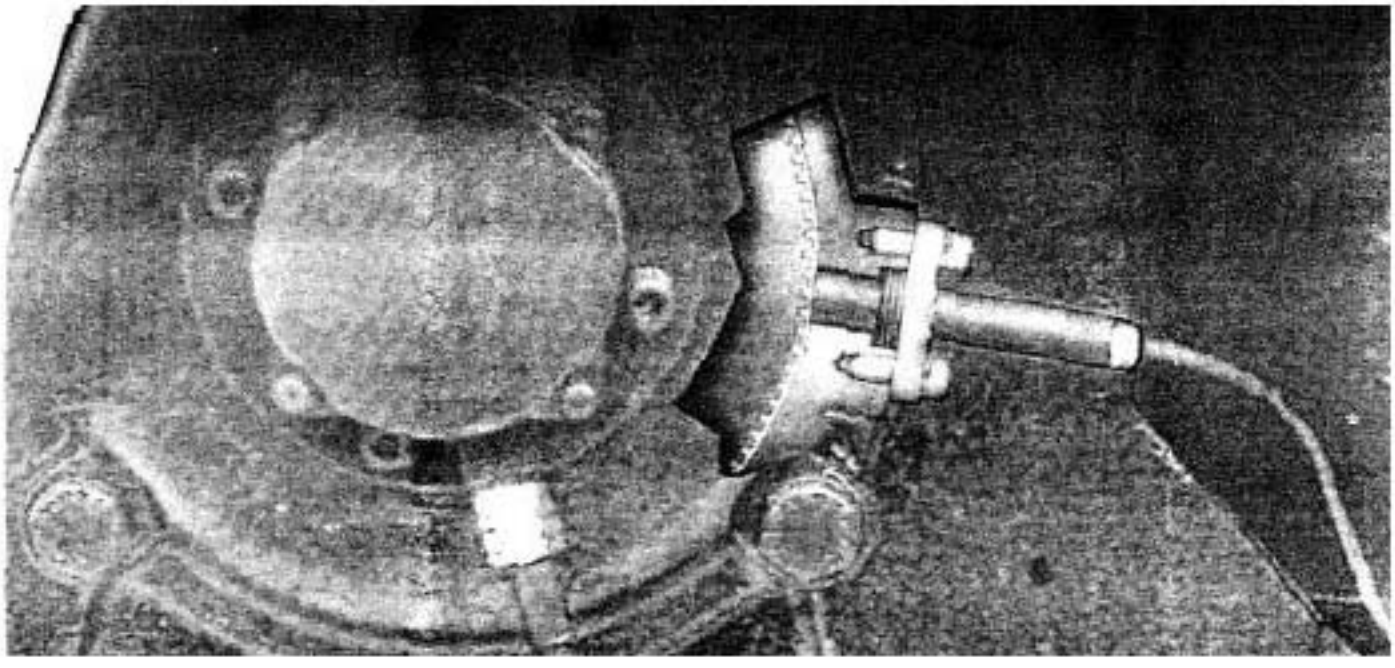

KMG-2H

Pulse Generator

ANNEXURE- C/1

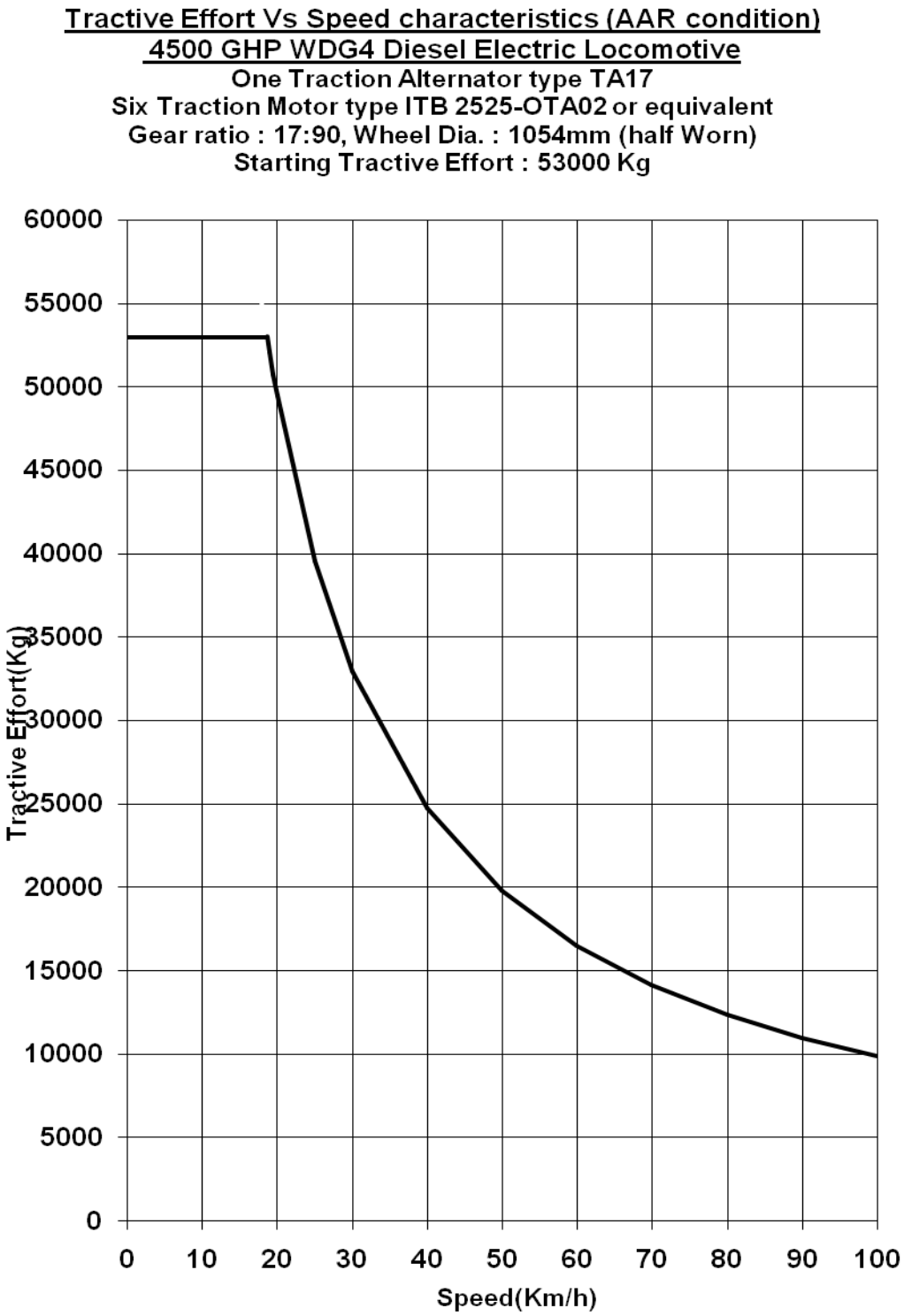
Tractive Effort Vs Speed characteristics (AAR condition)
4500 GHP WDG4 Diesel Electric Locomotive
One Traction Alternator type TA17
Six Traction Motor type ITB 2525-OTA02 or equivalent
Gear ratio : 17:90, Wheel Dia. : 1054mm (half Worn)
Starting Tractive Effort : 53000 Kg
Tractive Effort(Kg)
60000
55000
50000
45000
40000
35000
30000
25000
20000
15000
10000
5000
0
0
10
20
30
40
50
60
70
80
90
100
Speed(Km/h)

ANNEXURE-C/2

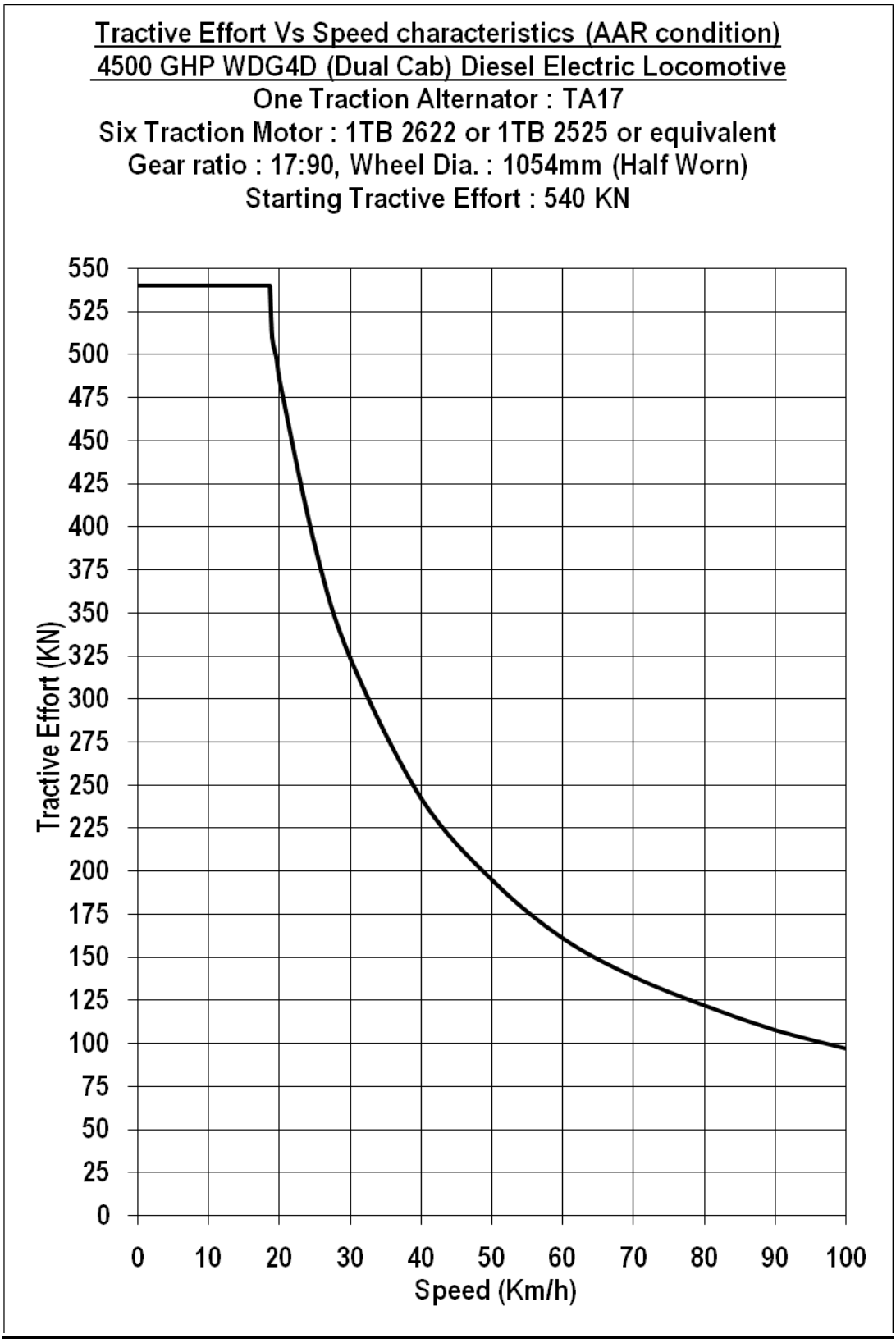
Tractive Effort Vs Speed characteristics (AAR condition)
4500 GHP WDG4D (Dual Cab) Diesel Electric Locomotive
One Traction Alternator : TA17
Six Traction Motor : 1TB 2622 or 1TB 2525 or equivalent
Gear ratio : 17:90, Wheel Dia. : 1054mm (Half Worn)
Starting Tractive Effort : 540 KN
Tractive Effort (KN)
550
525
500
475
450
425
400
375
350
325
300
275
250
225
200
175
150
125
100
75
50
25
0
0
10
20
30
40
50
60
70
80
90
100
Speed (Km/h)

ANNEXURE-D/1

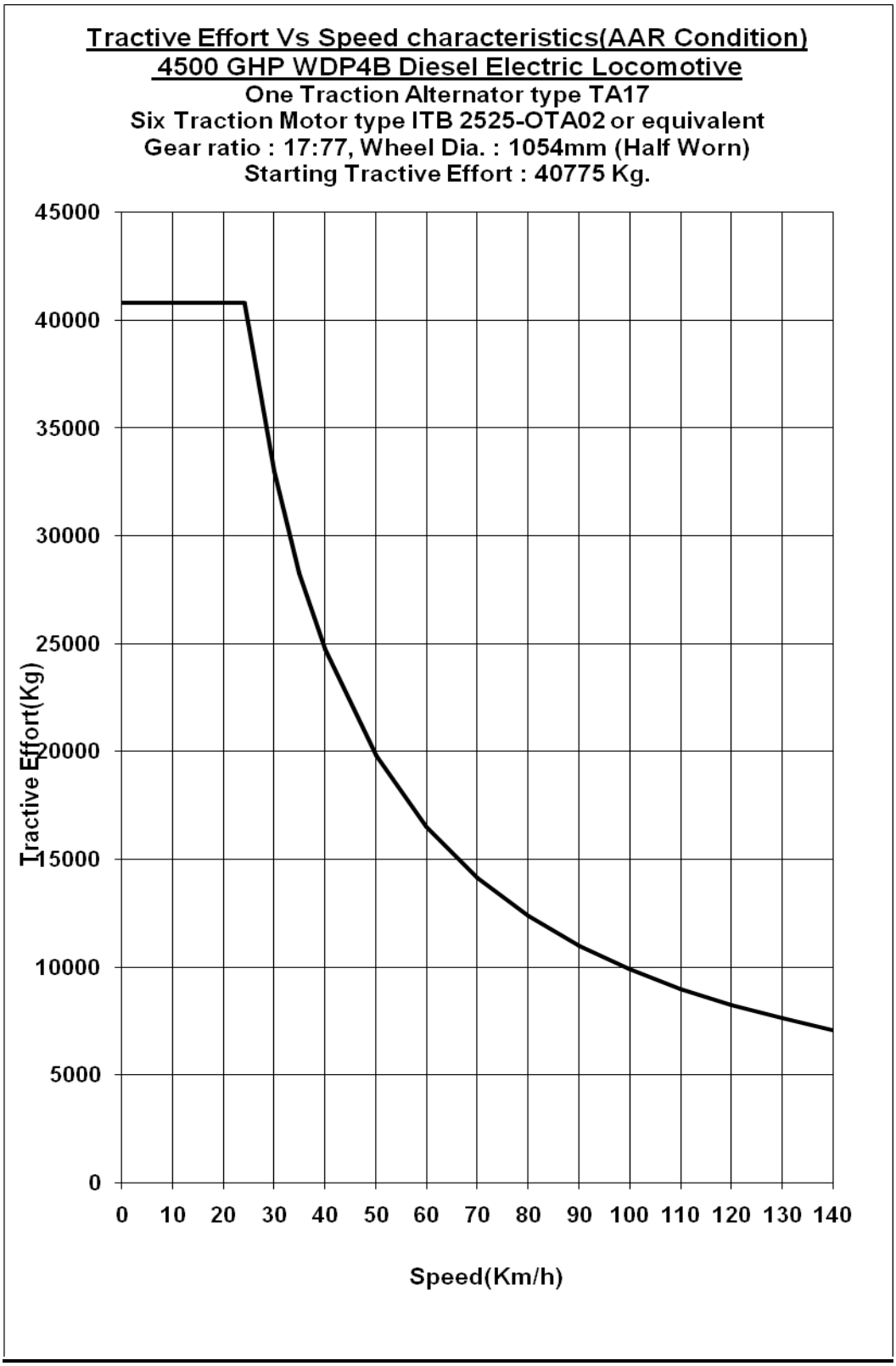
Tractive Effort Vs Speed characteristics(AAR Condition)
4500 GHP WDP4B Diesel Electric Locomotive
One Traction Alternator type TA17
Six Traction Motor type ITB 2525-OTA02 or equivalent
Gear ratio : 17:77, Wheel Dia. : 1054mm (Half Worn)
Starting Tractive Effort : 40775 Kg.
Tractive Effort(Kg)
45000
40000
35000
30000
25000
20000
15000
10000
5000
0
0 10 20 30 40 50 60 70 80 90 100 110 120 130 140
Speed(Km/h)

ANNEXURE-D/2

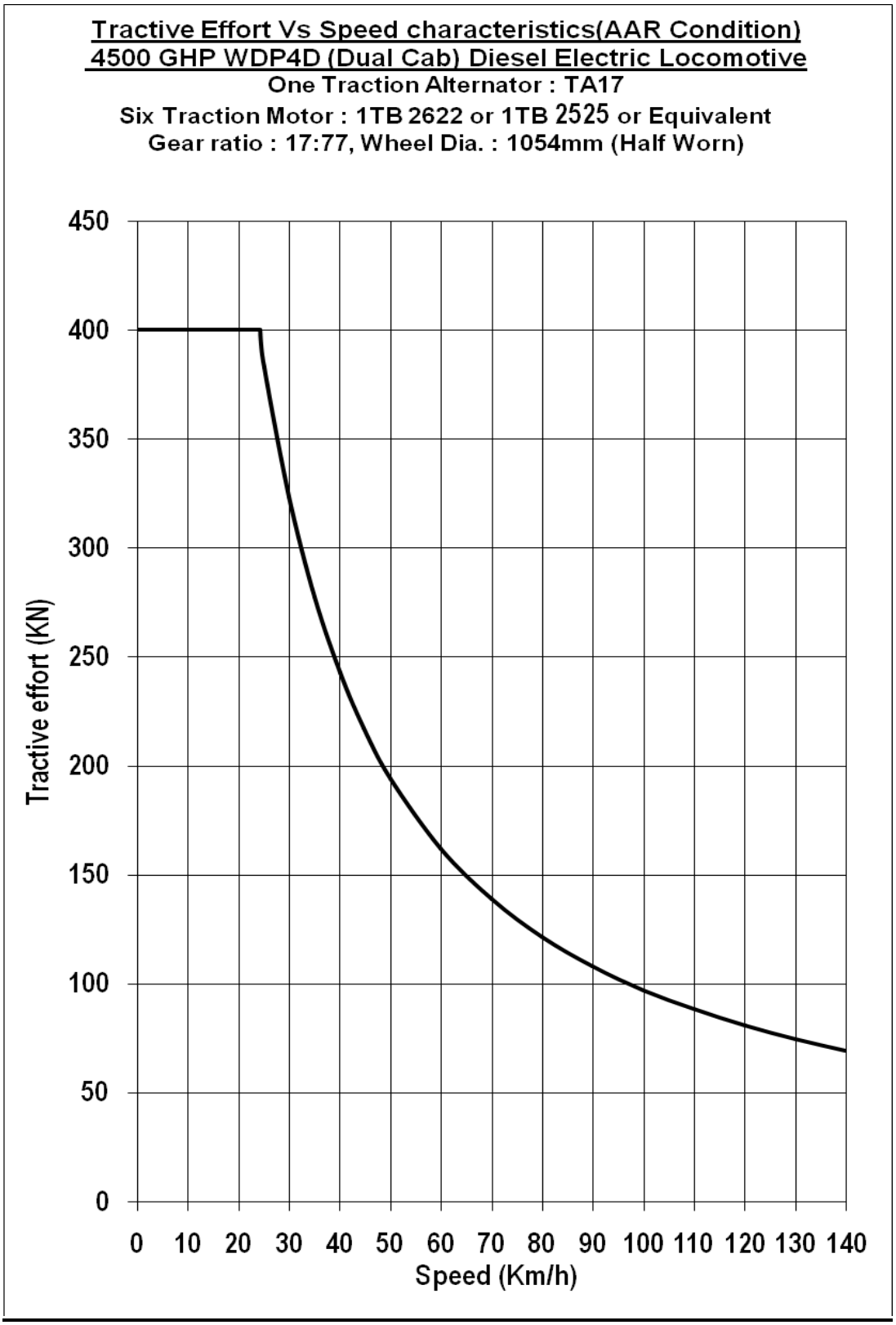
Tractive Effort Vs Speed characteristics(AAR Condition)
4500 GHP WDP4D (Dual Cab) Diesel Electric Locomotive
One Traction Alternator : TA17
Six Traction Motor : 1TB 2622 or 1TB 2525 or Equivalent
Gear ratio : 17:77, Wheel Dia. : 1054mm (Half Worn)
Tractive effort (KN)
450
400
350
300
250
200
150
100
50
0
0 10 20 30 40 50 60 70 80 90 100 110 120 130 140
Speed (Km/h)

ANNEXURE-E/1

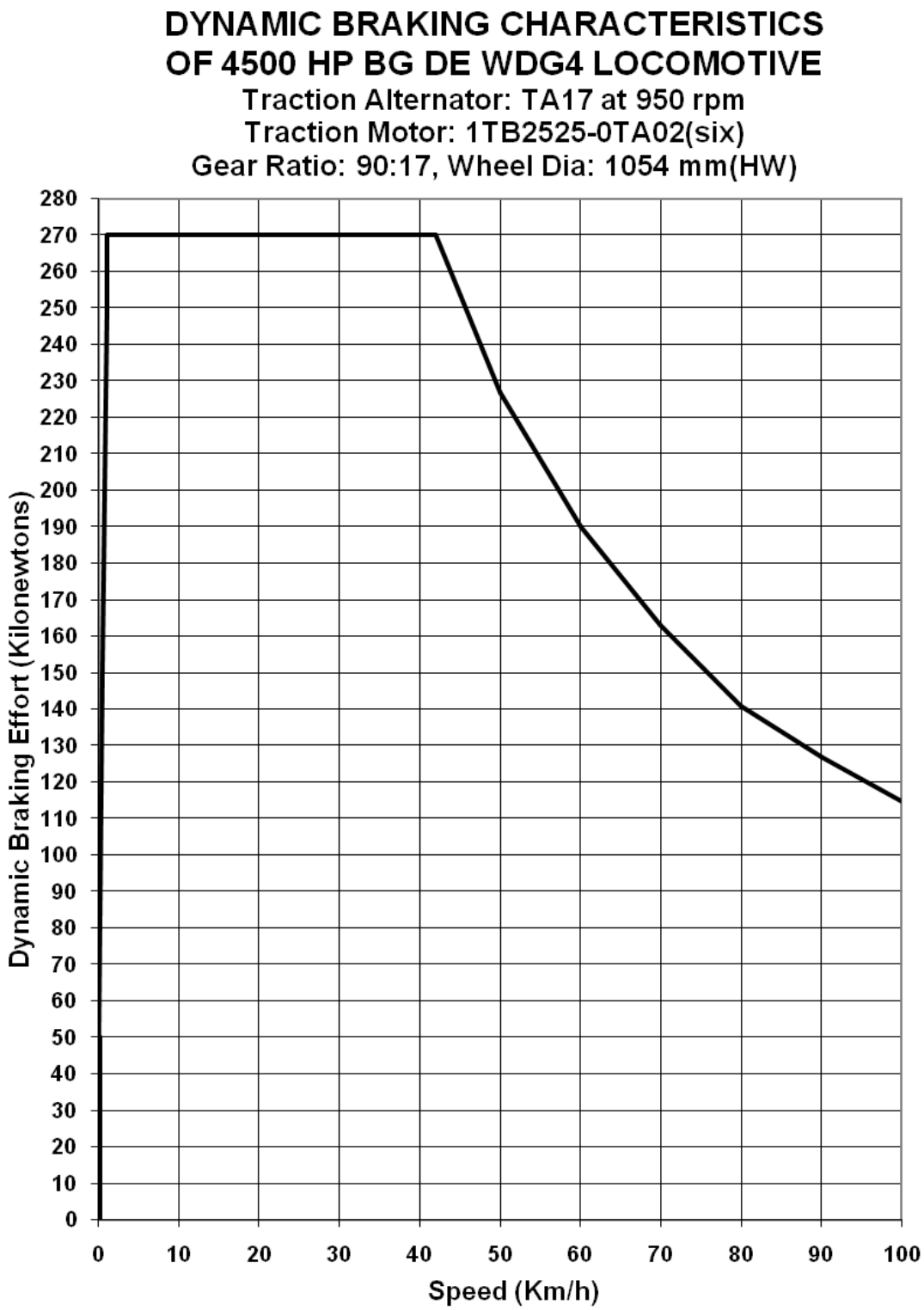
DYNAMIC BRAKING CHARACTERISTICS
OF 4500 HP BG DE WDG4 LOCOMOTIVE
Traction Alternator: TA17 at 950 rpm
Traction Motor: 1TB2525-0TA02(six)
Gear Ratio: 90:17, Wheel Dia: 1054 mm(HW)
Dynamic Braking Effort (Kilonewtons)
280
270
260
250
240
230
220
210
200
190
180
170
160
150
140
130
120
110
100
90
80
70
60
50
40
30
20
10
0
0
10
20
30
40
50
60
70
80
90
100
Speed (Km/h)

ANNEXURE-E/2

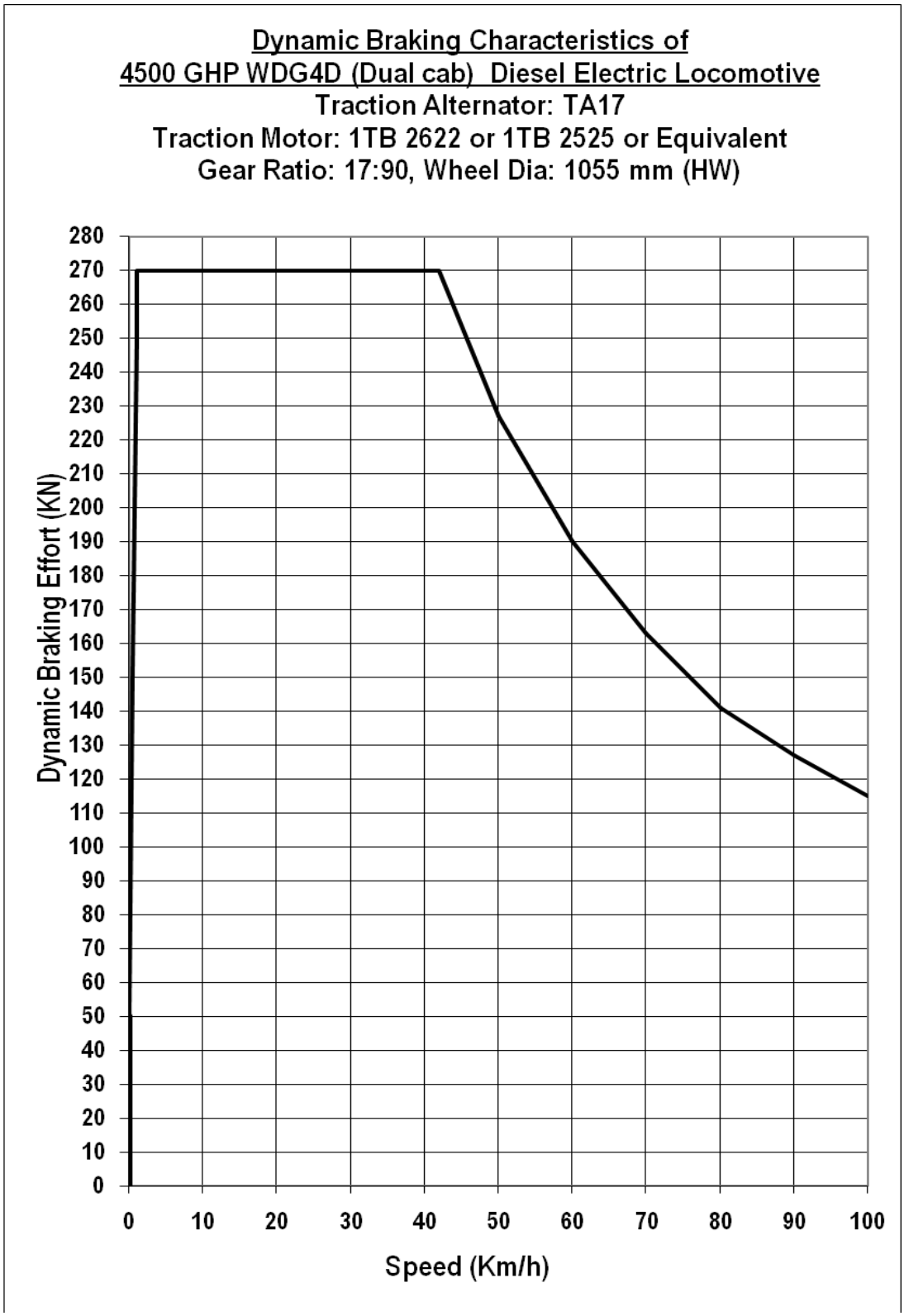
Dynamic Braking Characteristics of
4500 GHP WDG4D (Dual cab) Diesel Electric Locomotive
Traction Alternator: TA17
Traction Motor: 1TB 2622 or 1TB 2525 or Equivalent
Gear Ratio: 17:90, Wheel Dia: 1055 mm (HW)
Dynamic Braking Effort (KN)
280
270
260
250
240
230
220
210
200
190
180
170
160
150
140
130
120
110
100
90
80
70
60
50
40
30
20
10
0
0
10
20
30
40
50
60
70
80
90
100
Speed (Km/h)

ANNEXURE-F/1

DYNAMIC BRAKING CHARACTERISTICS OF 4500 HP BG DE WDP4B LOCOMOTIVE
Traction Alternator: TA17 at 950 rpm
Traction Motor: 1TB- 2525-0TA02(six)or Equivalent
Gear Ratio: 77:17, Wheel Dia: 1055 mm (HW)

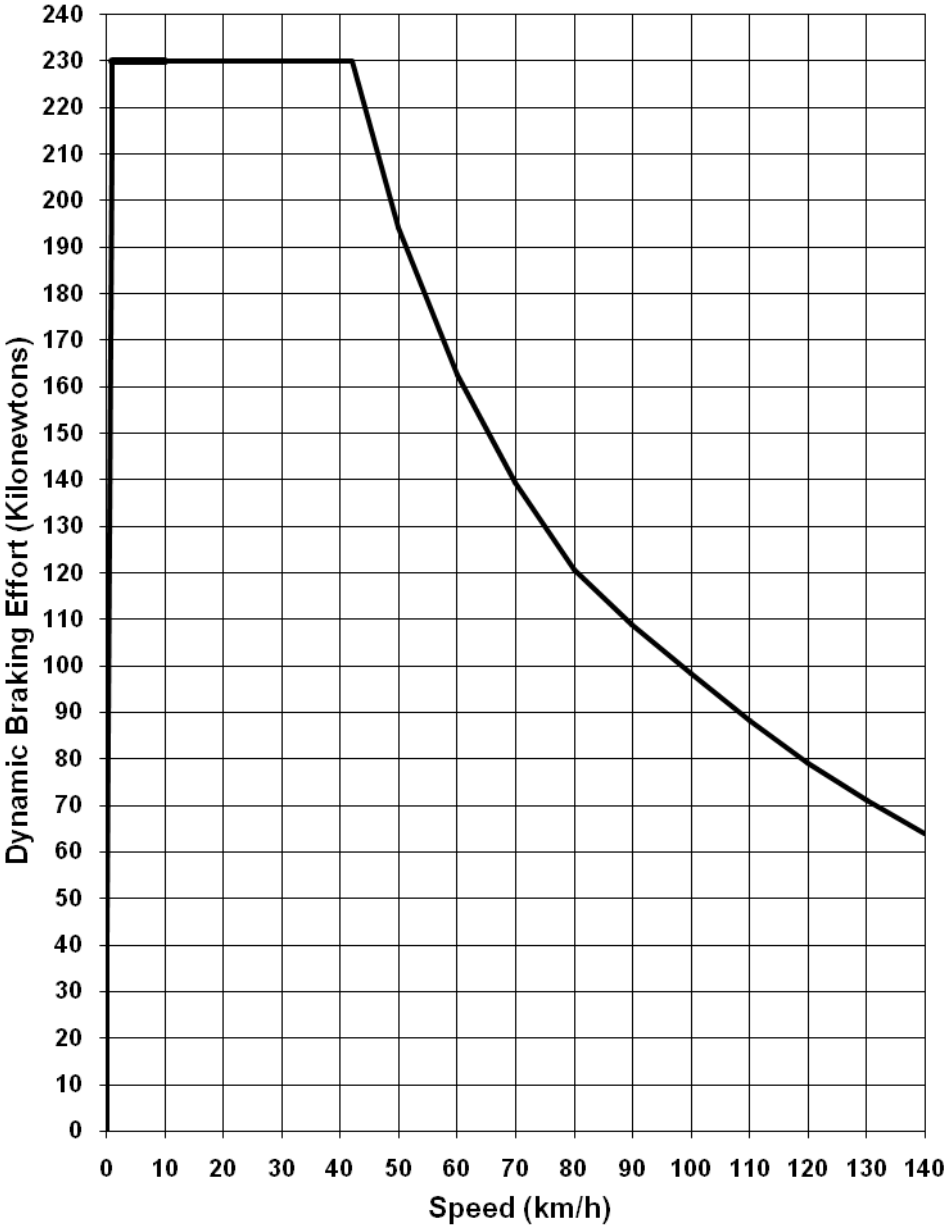

Note: The maximum dynamic braking effort estimated in the chart is based on electrical parameters of the loco. Actual effort may vary slightly depending upon the adhesion.

ANNEXURE-F/2

Dynamic Braking Charactristics of
4500 GHP WDP4D (Dual cab) Diesel Electric Locomotive
One Traction Alternator: TA17
Six Traction Motor: 1TB 2622 or 1TB 2525 or Equivalent
Gear Ratio: 17:77, Wheel Dia: 1054 mm (Half Worn)

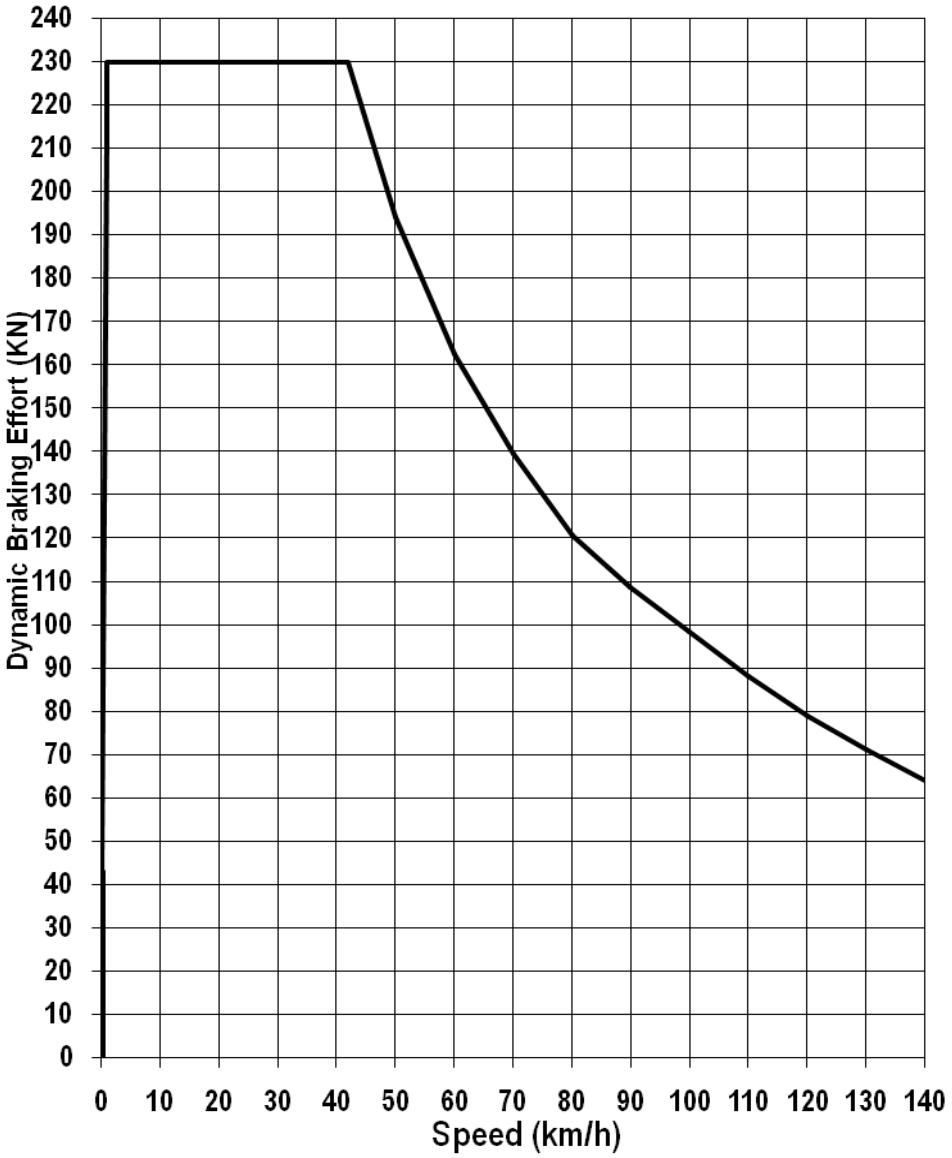

Note: The maximum dynamic braking effort estimated in the chart is based on electrical parameters of the loco. Actual effort may vary slightly depending upon the adhesion.

ANNEXURE - G

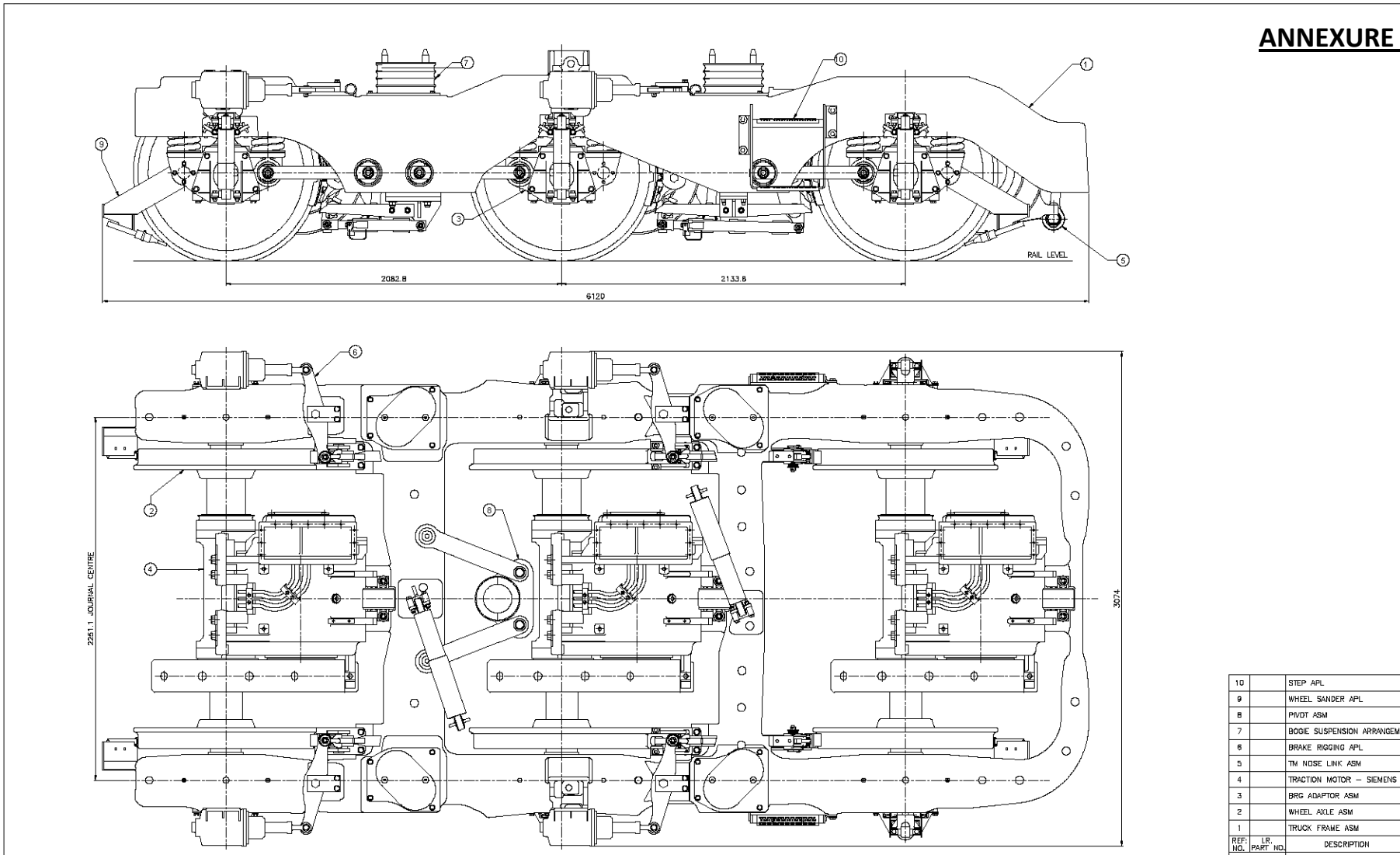

REF. NO.	LR. PART NO.	DESCRIPTION	NO./ LOCO	WT.(Kg) EACH	MATL.& SPEC./ REF. DRG. NO.
10		STEP APL	2		GM PART NO. 40080500
9		WHEEL SANDER APL	2		GM PART NO. 40082928
8		PIVOT ASM	2		GM PART NO. 40122481
7		BOGIE SUSPENSION ARRANGEMENT	2		RDSO DRG. NO. SK.VL-520
6		BRAKE RIGGING APL	2		GM PART NO. 40075357
5		TM NOSE LINK ASM	6		GM PART NO. 40075326
4		TRACTION MOTOR – SIEMENS AG	6		SIEMENS DRG. NO. ASE00686083A
3		BRG ADAPTOR ASM	12		GM PART NO. 40080242
2		WHEEL AXLE ASM	6		GM PART NO. 10882499
1		TRUCK FRAME ASM	2		GM PART NO. 40074880

APPLICABLE FOR: WDP4B LOCO

BOGIE GENERAL ARRANGEMENT

SCALE: 1:10 REF:NO. FIRST ISSUED

INDIAN RLYS RDSO(VDG) DRG. NO. SK.VL-519 SUPERSEDES SUPERSEDED BY

ALT.	NO.OF PLACES	REF:NO.	DESCRIPTION	ALT.NOTE NO.	SIGN.	DATE

DRN.BY Kr. Ram
CKD.BY
APPROVED BY
DATE MAR'06

SYMBOL	Raum (Max.)*	
~	50	
▽	25	
▽▽	6.3	
▽▽▽	0.8	*SURFACE ROUGHNESS TO IS:3073
▽▽▽▽	0.1	WELDING SYMBOLS TO IS:813
		TOLERANCES ON UNTOLERANCED DIMENSIONS TO IS:2102(MEDIUM)

ALL DIMENSIONS ARE IN mm.

ANNEXURE – H 1/6

Wt. /ASSLY.	f-1 FINISH ROUGH	(01) ROUGH CLEANING	SURFACE ROUGHNESS VALUE TO IS: 3073
	f-10 FLAME CUT	(1B) CHAMFERED	
		(01h) BURRS REMOVED	

GRADE.NO	N1	N2	N3	N4	N5	N6	N7	N8	N9	N10	N11	N12
Ra µm	.025	.050	0.1	0.2	0.4	0.8	1.6	3.2	6.3	12.5	25	50
SYMBOL	▽▽▽▽			▽▽▽				▽▽		▽		~

ALT. NO.	ALTERATION	DATE	REASON	CHECKED BY SSE/VEH.	APPROVED BY DY.CDE/BOGIE
(A)	1. WAS 5°–3 PLCS. 2. WAS ø 12.19–3 PLCS. 3. WAS 2.588 4. WAS 1.590	–sd– 13.10.97	–sd– 13.10.97	–sd– 13.10.97	–sd– 13.10.97
(B)	1. DIMENSION REMOVED–4 PLACES 2. TOLERANCE WAS –.050 3. DIMENSION ADDED–13 PLACES 4. WAS 3.00 +.004/–.000 5. WAS 2.56 REF 6. WAS 1.484 ±.005 7. WAS 1.764 8. WAS 2.56 TYP 4 PLACES 9. BOSS REVISED–WAS R.50 2 PLCS 10. NOTE ADDED 11. WAS 3.463 12. WAS 3.778 13. WAS 4°–4 PLACES 14. WAS 30°–2 PLACES 15. WAS 3.78 REF 16. NOTE REVISED 17. WAS 14° 18. WAS 2.50–2 PLACES 19. WAS 26.39 20. WAS 1.88 ROUGH, 2 PLACES 21. WAS .59 22. WAS 2.50 REF 23. WAS 3.35	–sd– 13.10.97	–sd– 13.10.97	–sd– 13.10.97	–sd– 13.10.97
(Ba)	TOLERANCES REVISED. AUTH:– RDSO LETTER NO. SD.EMD. 4000.TM.3 DATED 31.3.2008	–sd– 06.06.08		–sd– 06.06.08	–sd– 06.06.08
(c)	NOTE–3 ADDED FOR RADIOGRAPHY FOR PROTOTYPE AND REGULAR PRODUCTION. AUTH:–DCW/PATIALA DRG. NO.1/DCW /M/TM/397 FOR TUBE CASTING.	–sd– 14.05.13	DRAWING CONVERTED INTO DLW FORMAT	–sd– 14.05.13	–sd– 14.05.13
(d)	DIM. 12.373 +0.000 –0.002 WAS 12.373 +0.002 –0.000 AUTH:–RDSO LETEER No. SD.AUX.TMB. 3.1.HHP Dated 10.02.2017.		TO AVOID SLIPPAGE OF OUTER RACE FORM ITS MATING SURFACE OF MSU HOUSING	6/4/17	6/4/17

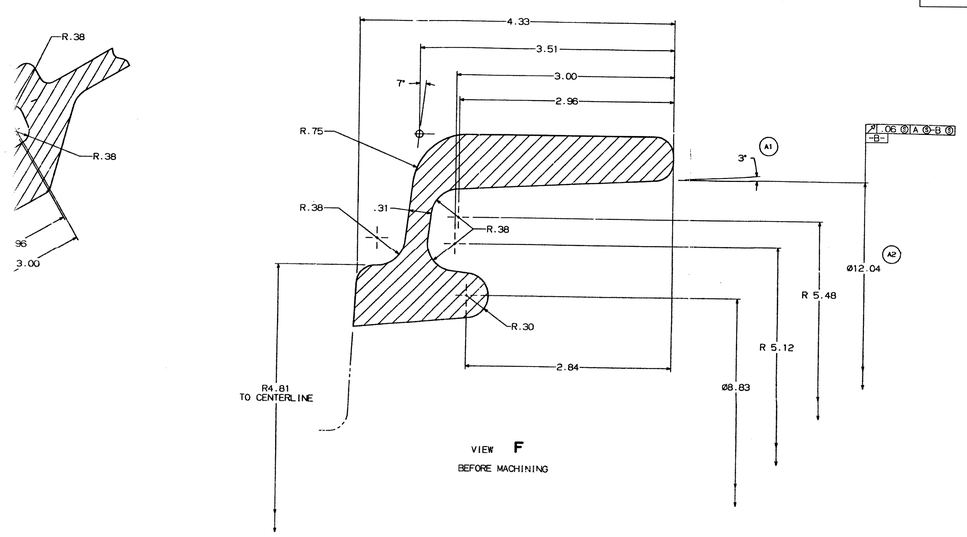

VIEW F
BEFORE MACHINING

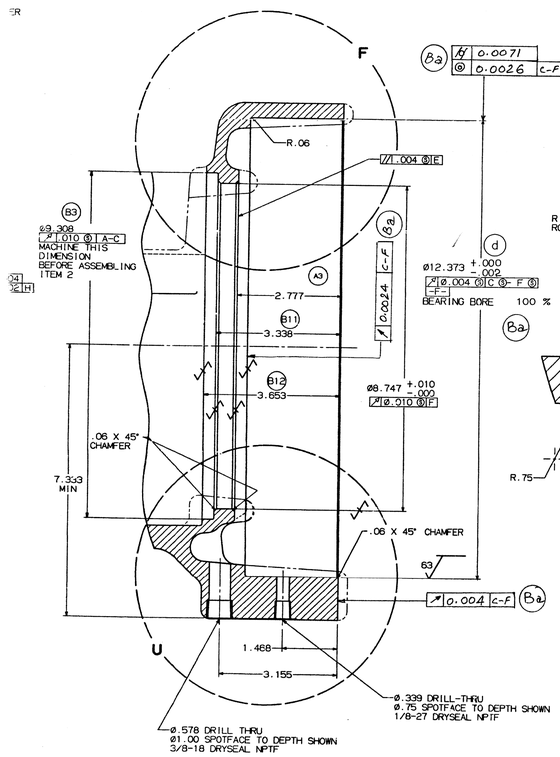

VIEW P
PINION END

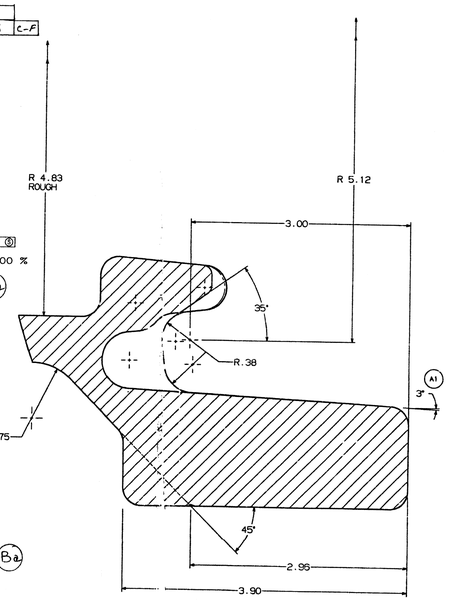

VIEW U
BEFORE MACHINING

NOTES:–

1. UNLESS OTHERWISE SPECIFIED:

   DRAFT ANGLE 7°
   CAST FILLETS R .25
   CAST CORNERS R .25
   WALLS OF CORED SECTIONS MUST BE CLEAN AND FREE FROM FOREIGN PARTICLES

2. WELD NOTES:

   WELD NOTE 'A' USE LOW HYDROGEN WELDING PROCESS

(c) 3.(I) FOR PROTOTYPE:– RADIOGRAPHIC EXAMINATION OF ENTIRE CASTING (100%) AS PER ETI–827 PARA 5.5

(II) FOR REGULAR PRODUCTION:– ONE HOUSING BEARING CASTING OUT OF EVERY 50 NOs. SHALL BE RADIOGRAPHIC EXAMINATION OF ENTIRE CASTING (100%) AS PER ETI–827 PARA 5.5

PART I. D.	A. I. 1975
WELD BRAZE SPEC	A. I. 1651

TOLERANCES ON ALL DIMENSIONS NOT SPECIFIED ON THE DRGS.TO BE IN ACCORDANCE WITH AI: 2400
BREAK ALL SHARP CORNERS UNLESS OTHERWISE SPECIFIED.

UNLESS OTHERWISE SPECIFIED,FOR DIAMETRAL FEATURES ROUNDNESS MUST BE WITHIN THE MMC & LMC BOUNDARY.SEPARATE TRUE POSITION CALLOUTS MAY BE GAGED SEPARATELY, REGARDLESS OF DATUM REFERENCE. PERFECT FORM REQUIRED FOR FEATURE OF SIZE AT MMC.

GEOMETRIC TOLERANCING SYMBOLS
FLAT / RUNOUT ⌰ TOTAL RUNOUT ○ ROUND
ANGULAR — STRAIGHT ⌖ TRUE POSITION ⌭ CYLINDRICAL
◎ CONCENTRIC ⊥ PERPENDICULAR ø DIAMETER // PARALLEL
Ⓜ MAXIMUM MATERIAL CONDITION(MMC) ⌒ PROFILE OF A LINE
Ⓛ LEAST MATERIAL CONDITION(LMC) ⌓ PROFILE OF A SURFACES
Ⓡ REGARDLESS OF FEATURE SIZES (RFS) .XX BASIC DIMENSION (XX) DATUM TARGET
Ⓟ PROJECTED TOLERANCE ZONE (PYZ) -A- DATUM IDENTIFICATION

NO. OFF	DESCRIPTION & DIMENSION	ITEM	PART NO.	DRG. NO.	Wt. /UNIT	MATERIAL	SPECIFICATION
1	PAD-TAPPING	3	17088033	8389794	–	–	–
1	SHEET-CLOSURE	2	17140950	40076162	–	–	–
1	HOUSING-BRG-CSTG	1	17250663	40075432	–	–	–

GROUP : MOTOR TRUCK

SUPERSEDED BY

SUPERSEDES

SCALE

VERIFIED BY SSE/D 6/4/17

PROJECTION

CHD.

DRN.

ALT. A B Ba c d

WDG4.4D/WDP4B.4D QTY/ASSLY.

HOUSING–BRG–MACH

DIESEL LOCOMOTIVE WORKS VARANASI

PART NO. 17020864

DRG. NO. 40075563 (SH. 01 OF 06)

Dy. CDE/BOGIE 6/4/17

1/40076742, 1066249B
ASSLY. PART NO.

THIS DRAWING IS A PROPERTY OF DLW/INDIAN RAILWAYS AND ANY UNAUTHORISED USE OF THE DRAWING WILL BE CONSIDERED ILLIGAL AND DLW/INDIAN RAILWAYS WILL HAVE RIGHT TO INITIATE LEGAL PROCEEDINGS AGAINST THE DEFAULTERS.

ISSUING AUTHORITY : SSE/RECORDS

ALL DIMS. ARE IN INCHES.

ANNEXURE – H 2/6

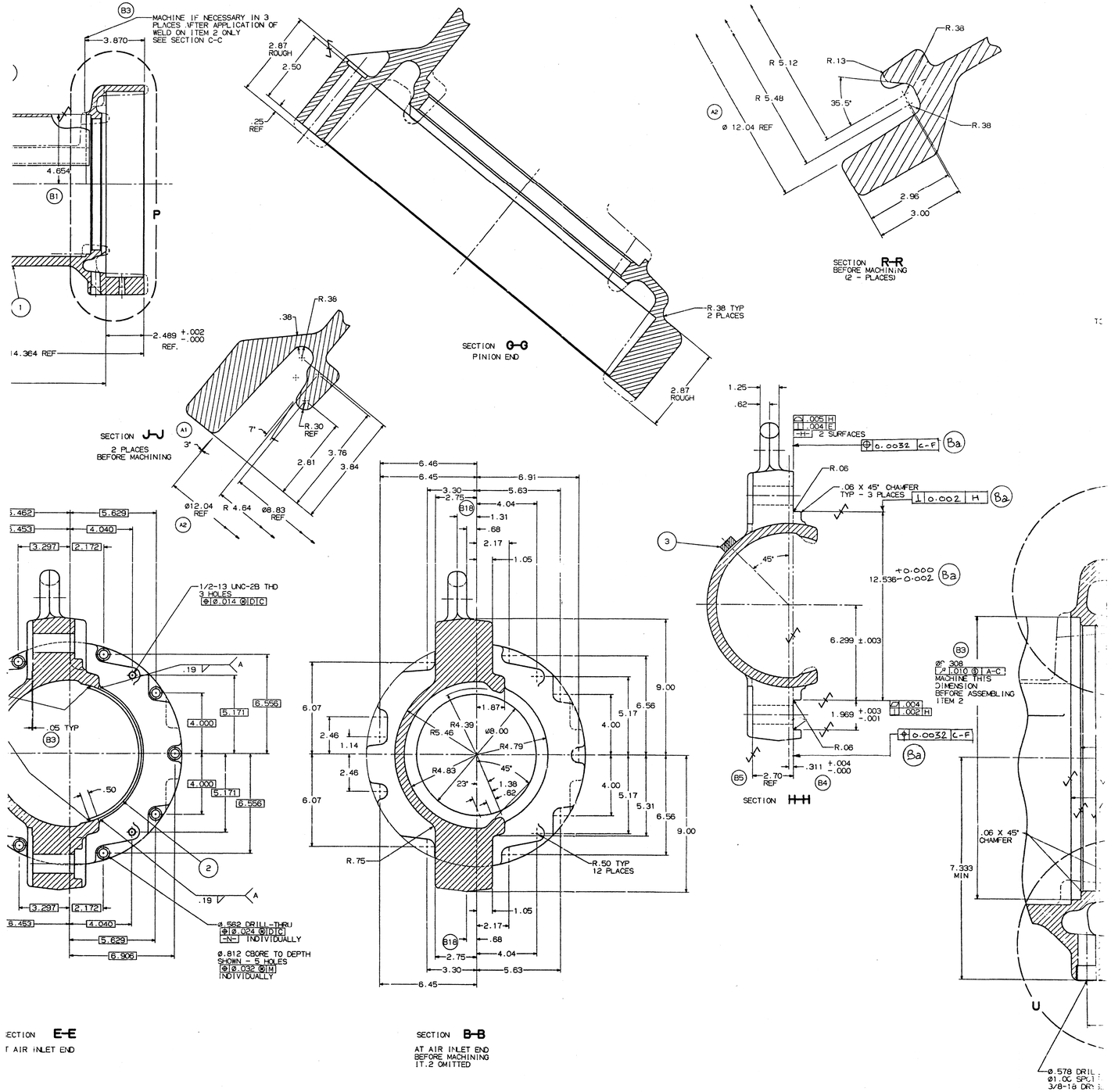

DRG NO.	SHEET 2 OF 6
40075563	REV. d

ANNEXURE – H 3/6

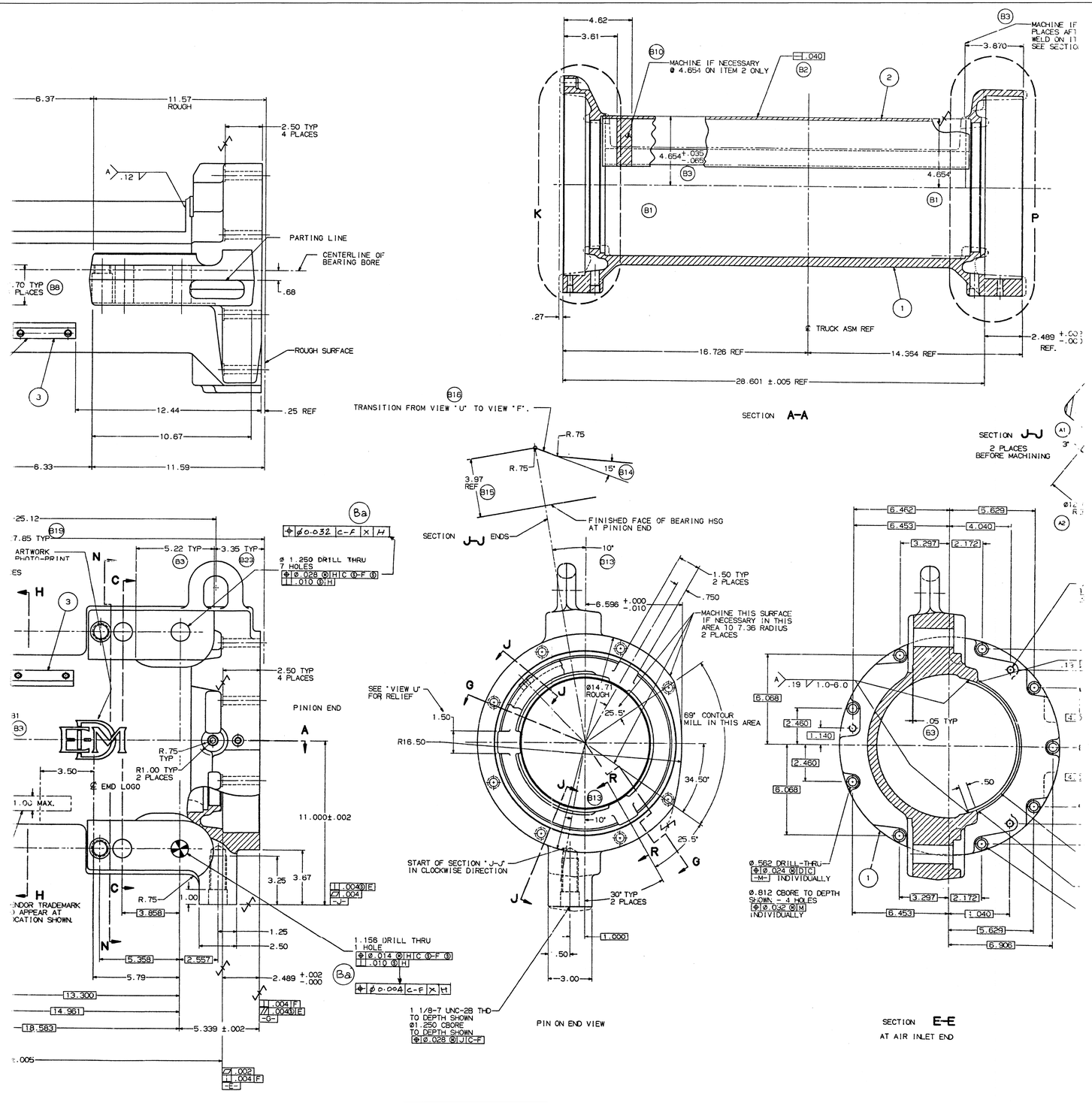

DRG NO.	SHEET 3 OF 6
40075563	REV. d

ANNEXURE – H 4/6

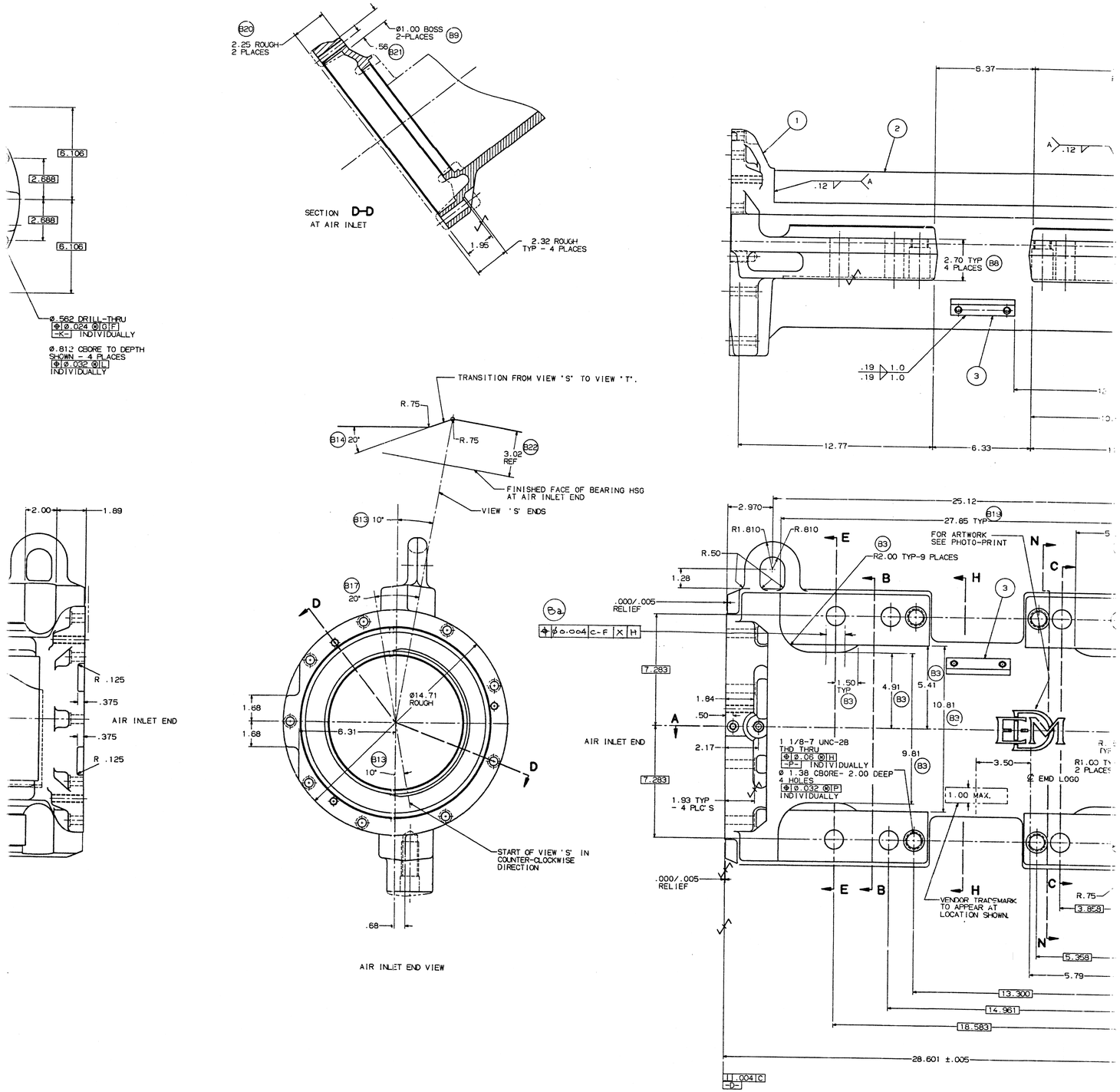

DRC NO.	SHEET 4 OF 6
40075563	REV. d

ANNEXURE – H 5/6

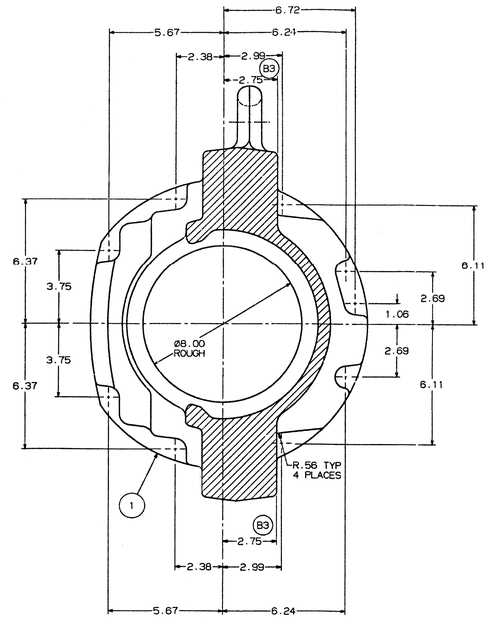

SECTION N–N
AT PINION END

BEFORE MACHINING
ITEM 2 OMITTED

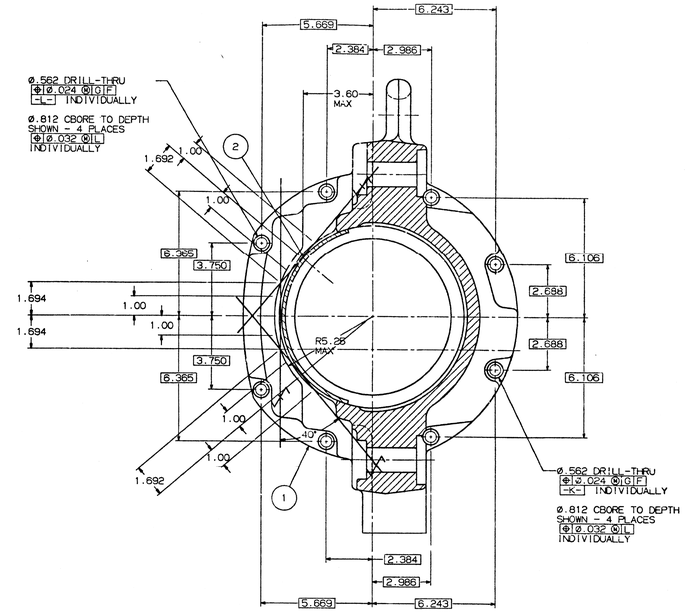

SECTION C–C
AT PINION END

.02 MAX TYP
R Ø.812 CBORES

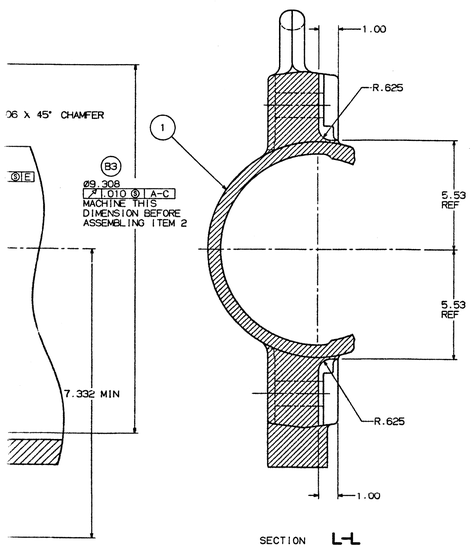

SECTION L–L

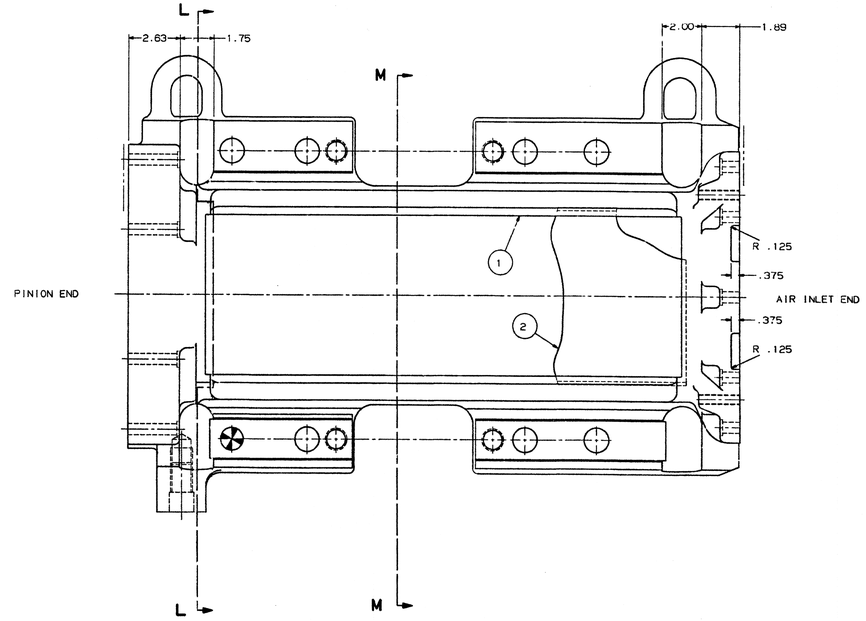

.578 DRILL THRU
1.00 SPACE TO DEPTH SHOWN
3/8-18 DRYSEAL NPTF

DRILL THRU
SPACE TO DEPTH SHOWN
DRYSEAL NPTF

DRG NO.	SHEET 5 OF 6
40075563	REV. d

ANNEXURE – H 6/6

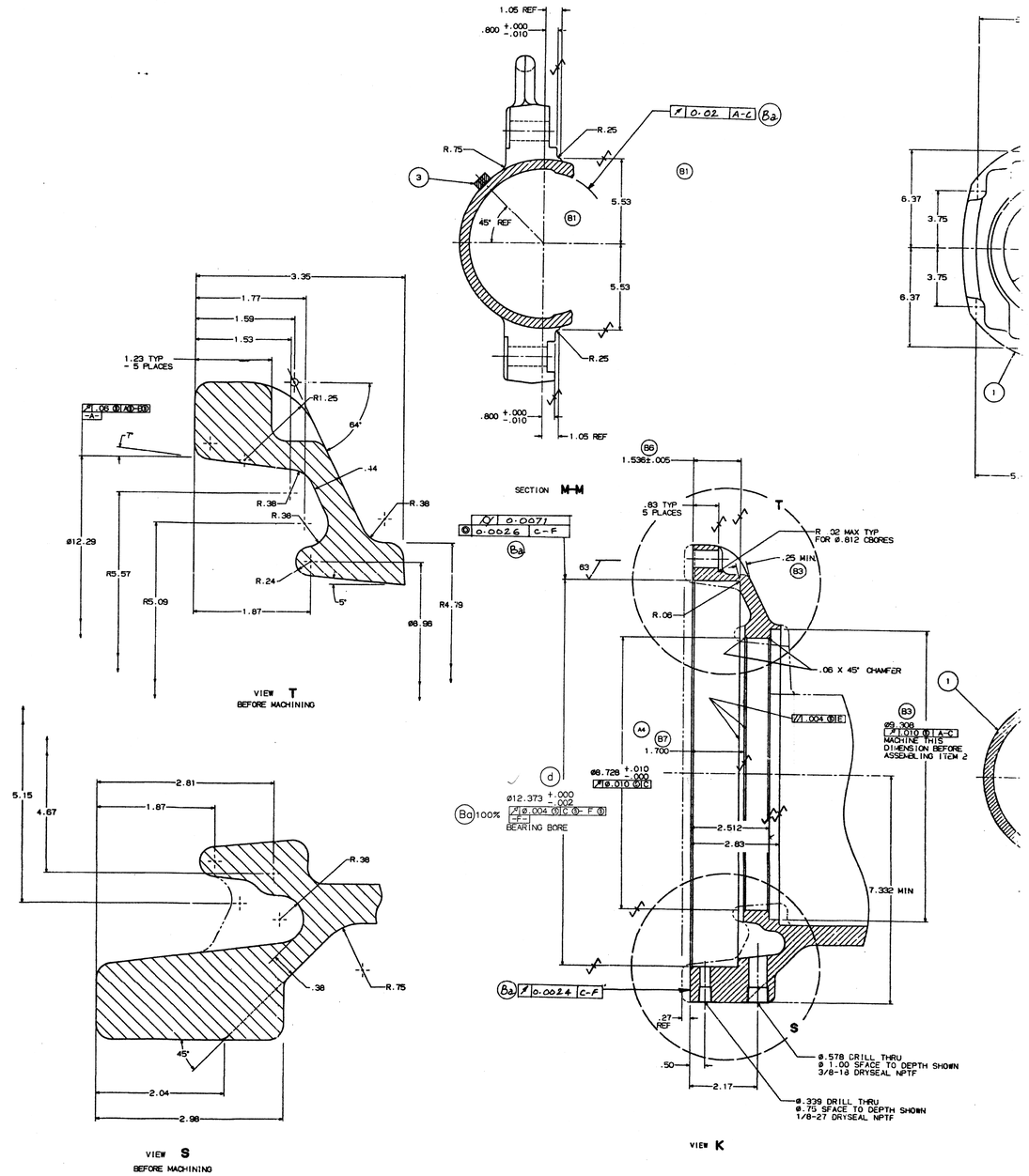

DRG NO.	SHEET 6 OF 6
40075563	REV. d

ANNEXURE – I/1

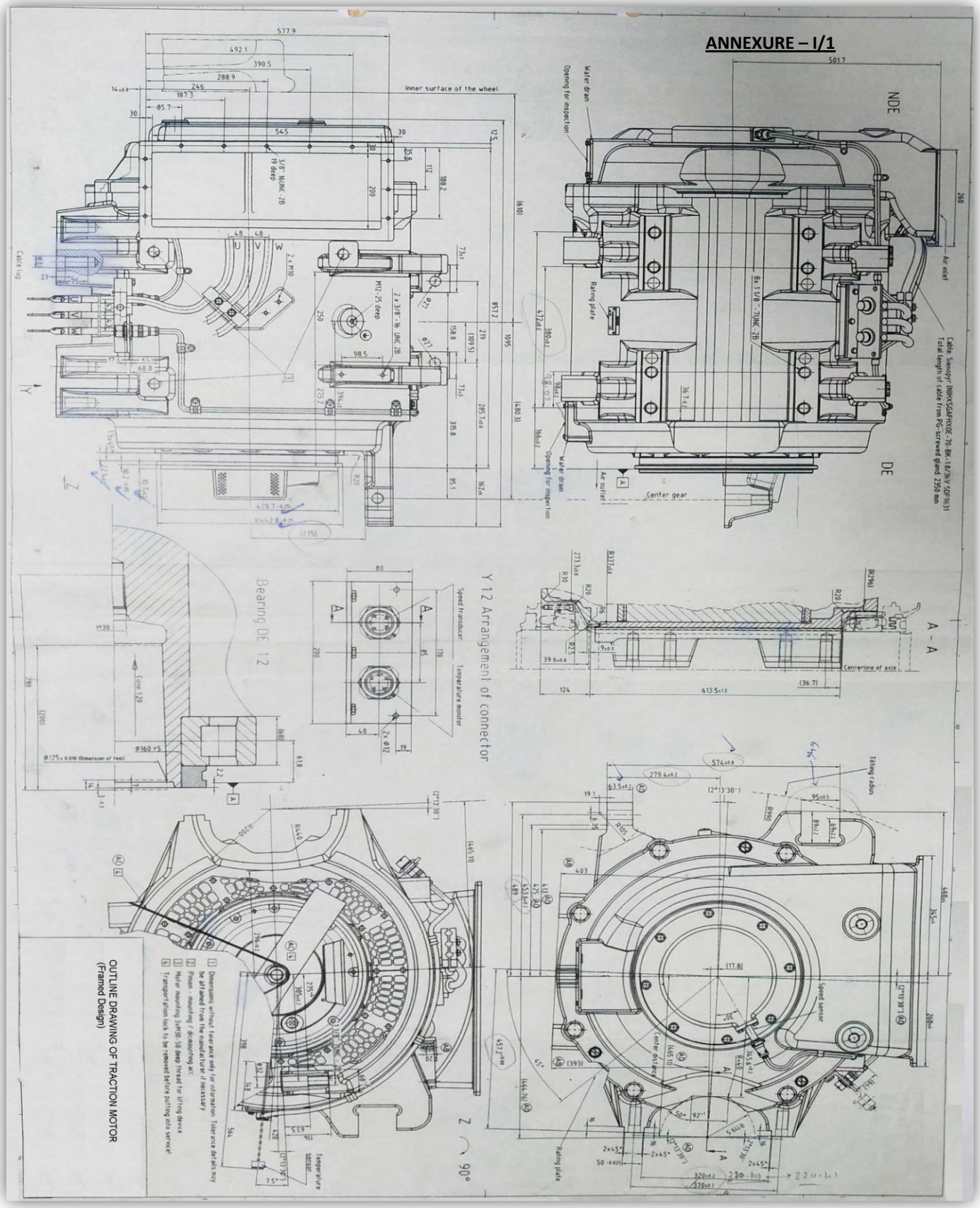
NDE
DE
Inner surface of the wheel
Water drain
Opening for inspection
Air inlet
Air outlet
Raining plate
Center gear
Cable lug
Bearing DE 12
Y 12 Arrangement of connector
Speed transducer
Temperature monitor
A - A
Centerline of axle
Lifting lugs
Speed sensor
Temperature sensor
Z ∩ 90°
OUTLINE DRAWING OF TRACTION MOTOR
(Framed Design)

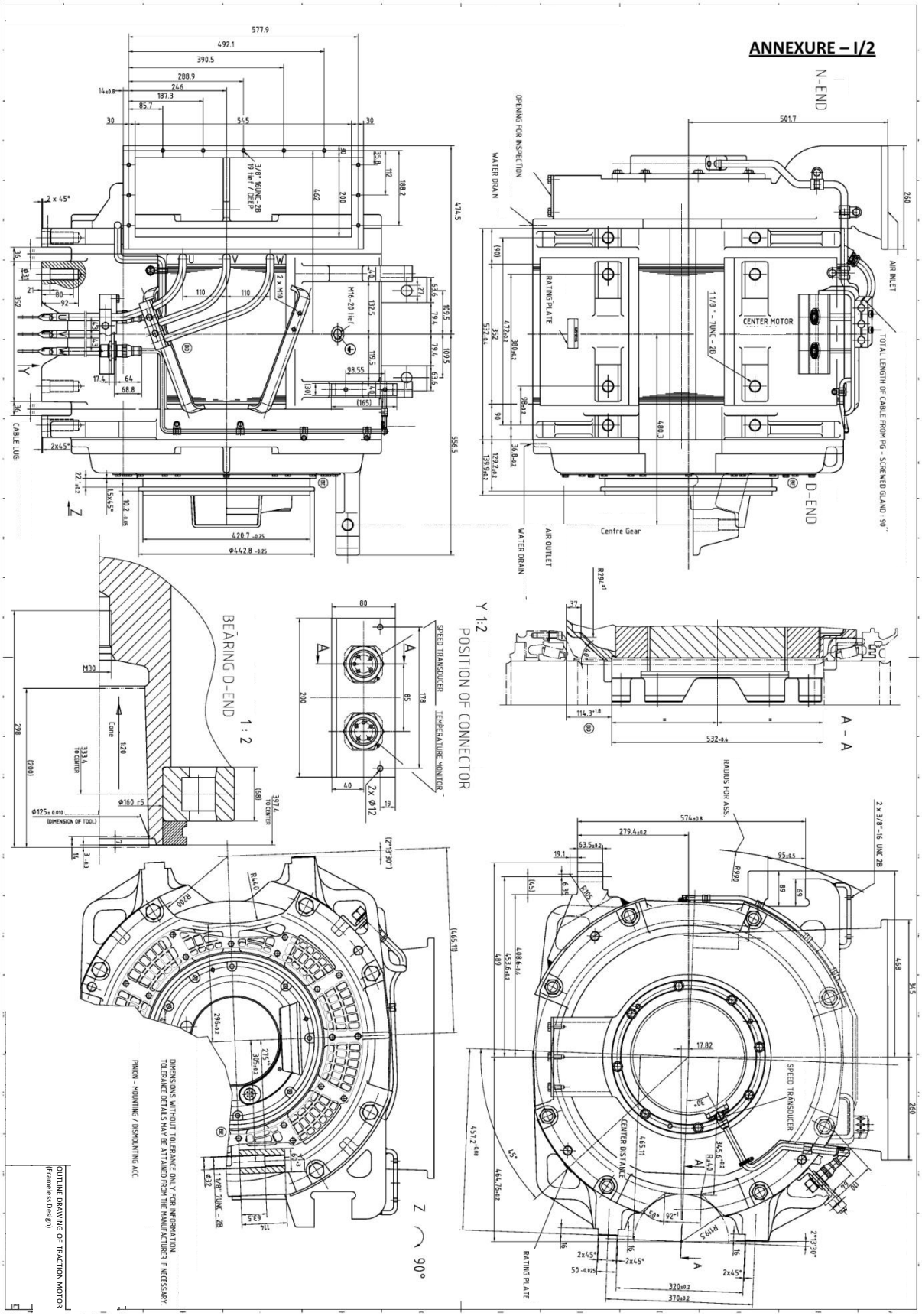
ANNEXURE – I/2
N-END
D-END
OPENING FOR INSPECTION
WATER DRAIN
AIR INLET
TOTAL LENGTH OF CABLE FROM PG - SCREWED GLAND : 90"
RATING PLATE
CENTER MOTOR
1 1/8" - 7UNC - 2B
Centre Gear
AIR OUTLET
CABLE LUG
A - A
BEARING D-END 1 : 2
Y 1:2
POSITION OF CONNECTOR
SPEED TRANSDUCER
TEMPERATURE MONITOR
RADIUS FOR ASS.
2 x 3/8"-16 UNC 2B
SPEED TRANSDUCER
CENTER DISTANCE
RATING PLATE
Z 90°
DIMENSIONS WITHOUT TOLERANCE ONLY FOR INFORMATION.
TOLERANCE DETAILS MAY BE ATTAINED FROM THE MANUFACTURER IF NECESSARY.
PINION - MOUNTING / DISMOUNTING ACC.
OUTLINE DRAWING OF TRACTION MOTOR
(Frameless Design)

Wt. /ASSLY.	f-1 FINISH ROUGH	(01) ROUGH CLEANING	SURFACE ROUGHNESS VALUE TO IS: 3073	GRADE.NO	N1	N2	N3	N4	N5	N6	N7	N8	N9	N10	N11	N12
	f-10 FLAME CUT	(1B) CHAMFERED		Ra µm	.025	.050	0.1	0.2	0.4	0.8	1.6	3.2	6.3	12.5	25	50
		(01b) BURRS REMOVED		SYMBOL												~

ALT.NO.	ALTERATION	DATE	REASON	CHECKED BY SSE/VEH.	APPROVED BY DY.CDE/BOGIE
a	DRAWING CONVERTED INTO DLW FORMAT & NOTE ADDED.	-sd-	DRAWING MADE IN DLW FORMAT	-sd- 15.11.10	-sd- 15.11.10
b	NOTE-3 & OEM VENDOR NAME ADEED.	-sd-		-sd- 16.08.13	-sd- 16.08.13
c	NOTE- 4 TO 6 ADDED	31/3/15	QUALITY IMPROVEMENT	31/3/15	31/3/15

ANNEXURE – J/1

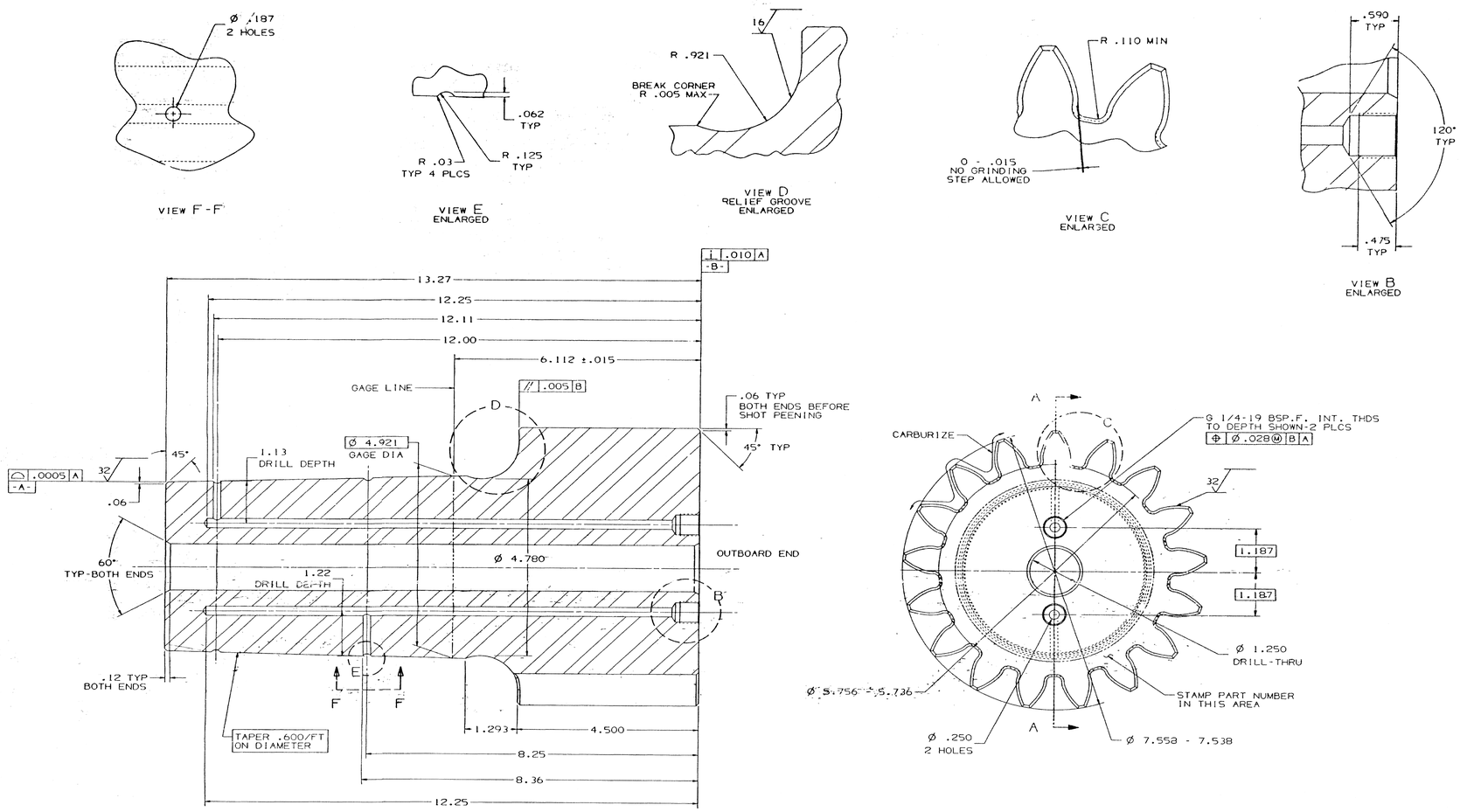

NOTE:-

1. PINION SHALL BE MANUFACTURED BY RDSO APPROVED OR RECOMMENDED VENDORS.
2. MANUFACTURER'S ID MARK,MONTH & YEAR OF MANUFACTURING SHOULD BE PUNCHED AT CLEARLY VISIBLE LOCATION.
3. TECHNICAL REQUIREMENTS FOR MANUFACTURING OF GEARS & PINIONS AS PER STR No. MP.STR.EM.04.11.11 (Rev.–00) February"12.
4. PAINTING: ONE COAT OF ANTI CORROSIVE RED OXIDE ZINC CHROMATE PRIMER CONFORMING TO IS: 2074 MUST BE DONE AFTER SHOT BLASTING (PRIOR TO MACHINING).
   MACHINING SURFACE TO BE SUITABLY PROTECTED AGAINST OXIDATION & CORROSION
   ONE COAT OF ANTI CORROSIVE PAINT MUST BE APPLIED ON MACHINED SURFACE OF ANY REPUTED BRAND. SUCH COATING SHOULD BE REMOVED EASILY BY KEROSENE OIL OR WHITE SPIRIT.
   FINAL COMPONENT SHALL BE GIVEN A FINISH COAT OF 25 MICRON DFT SYNTHETIC ENAMEL TO IS:8662 EXCEPT MACHINED SURFACE.
5. PACKING & TRANSPORTATION: MATERIAL TO BE SUPPLIED IN PROPER WOODEN PACKING & IT SHALL BE ENSURED THAT PACKING SHOULD BE WATERPROOF TO ENSURE DELIVERY AT DLW WITHOUT ANY TRANSIT DAMAGE. MARKING ON THE PACKING SHALL INCLUDE – MANUFACTURER'S NAME, DLW P.O. NO., DLW PART NO., BATCH/ LOT NO. & YEAR OF MANUFACTURING.
6. SUITABLE PLASTIC CAPS SHOULD BE PROVIDED IN DRILLED/TAPPED HOLES.

DESIGN SPECIFICATIONS, DIMENSIONS, AND REQUIREMENTS BASED UPON:	
INDUSTRY STANDARD:	
VENDOR NAME: FAIRFIELD MFG CO	
VENDOR PART NO. : N/A	
VENDOR NAME:	
VENDOR PART NO. :	
VENDOR NAME:	
VENDOR PART NO. :	
VENDOR NAME:	
VENDOR PART NO. :	
ENGINEERING IDENTIFIES THIS ITEM AS A SERVICEABLE PART:	
ENGINEERING IDENTIFIES THIS ITEM AS HAVING A SHELF LIFE:	

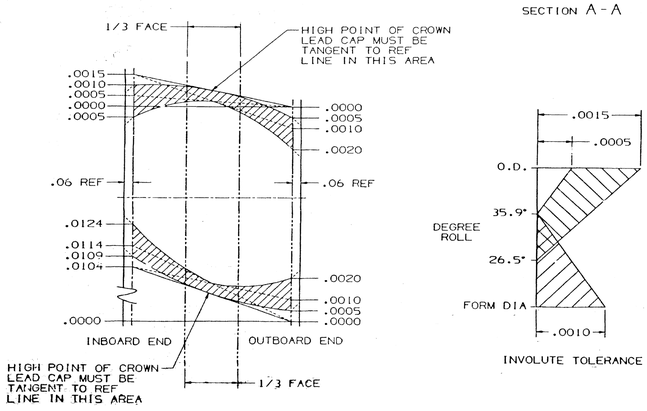

TOOTH TAPER AND CROWN DIMENSIONED IN PLANE TANGENT TO PITCH CIRCLE

TOLERANCE BAND. CROWN AND LEAD

INVOLUTE TOLERANCE

NUMBER OF TEETH	17
DIAMETRAL PITCH	2.5668
PRESSURE ANGLE	25.00°
PITCH DIAMETER	6.6230
BASE DIAMETER	6.0225
FORM DIAMETER	6.1418
ARC CIRC TOOTH THK - NORM AT PITCH DIAMETER AT OUTBOARD END	.698-.691
MEASUREMENT OVER TWO .750 DIAMETER PINS AT OUTBOARD END	7.899-7.887
RUNOUT TOLERANCE	.0029
PITCH TOLERANCE	.0006

FINISH ALL OVER

MATERIAL : EMS 81 STEEL FORGING

HEAT TREATMENT:

CARBURIZE AND HARDEN GEAR TEETH FOR .070-.090 FINISHED CASE DEPTH MEASURED AT PITCH LINE.

END FACES MAY ALSO BE CARBURIZED AND HARDENED. TAPPED HOLES SHALL NOT BE CARBURIZED.

TEMPER 300°F MIN.
RC 60 MINIMUM AT TOOTH SURFACE
RC 25 MINIMUM AT INTERSECTION OF TOOTH ℄ AND ROOT RADIUS

RC 28-38 AT SURFACE OF RELIEF GROOVE (SHOWN IN VIEW D) AND ALONG SHAFT TAPER

SHOT PEEN TOOTH ROOT & FILLET RADIUS BEFORE GRINDING TEETH. USE S330 HARD SHOT TO OBTAIN 200% MINIMUM COVERAGE IN ROOT AREA. PEENING INTENSITY .007-.010 C.

MAGNAFLUX INSPECT PER E.T.I. - 57

ALL TOOTH ELEMENT SPECIFICATIONS ARE FROM THE AXIS OF -A-

QTY. /LOCO = 06

NO. OFF	DESCRIPTION & DIMENSION	ITEM	PART NO.	DRG. NO.	Wt. /UNIT	MATERIAL	SPECIFICATION
1	PINION 17 TEETH		18440034	10662229	84.8 LBS	STEEL FORGING	EMS-81

TOLERANCES ON ALL DIMENSIONS NOT SPECIFIED ON THE DRGS.TO BE IN ACCORDANCE WITH AI: 2400 BREAK ALL SHARP CORNERS UNLESS OTHERWISE SPECIFIED.

UNLESS OTHERWISE SPECIFIED,FOR DIAMETRAL FEATURES ROUNDNESS MUST BE WITHIN THE MMC & LMC BOUNDARY.SEPARATE TRUE POSITION CALLOUTS MAY BE GAGED SEPARATELY, REGARDLESS OF DATUM REFERENCE. PERFECT FORM REQUIRED FOR FEATURE OF SIZE AT MMC.

GEOMETRIC TOLERANCING SYMBOLS
FLAT / RUNOUT TOTAL RUNOUT ROUND
ANGULAR — STRAIGHT TRUE POSITION CYLINDRICAL
CONCENTRIC ⊥ PERPENDICULAR Ø DIAMETER // PARALLEL
Ⓜ MAXIMUM MATERIAL CONDITION(MMC) PROFILE OF A LINE
Ⓛ LEAST MATERIAL CONDITION(LMC) PROFILE OF A SURFACES
Ⓢ REGARDLESS OF FEATURE SIZES (RFS) .XX BASIC DIMENSION
Ⓟ PROJECTED TOLERANCE ZONE (PYZ) -A- DATUM IDENTIFICATION

GROUP : MOTOR TRUCK

SUPERSEDED BY

SUPERSEDES

SCALE

PROJECTION

ALT. a b c

VERIFIED BY SSE/V

CHD.

DRN.

WDP4/WDP4D QTY. /ASSLY.

Dy. CDE/BOGIE

2/40086754
ASSLY. PART NO.

PINION-17 TEETH

DIESEL LOCOMOTIVE WORKS VARANASI

PART NO: 18440034

DRG. NO: 10662229

THIS DRAWING IS A PROPERTY OF DLW/INDIAN RAILWAYS AND ANY UNAUTHORISED USE OF THE DRAWING WILL BE CONSIDERED ILLIGAL AND DLW/INDIAN RAILWAYS WILL HAVE RIGHT TO INITIATE LEGAL PROCEEDINGS AGAINST THE DEFAULTERS.

ISSUING AUTHORITY : SSE/RECORDS

ALL DIMS. ARE IN INCHES.

Wt. /ASSLY.	f-1 FINISH ROUGH	(01) ROUGH CLEANING
Kg	f-10 FLAME CUT	(1B) CHAMFERED
		(01b) BURRS REMOVED

SURFACE ROUGHNESS VALUE TO IS: 3073

GRADE.NO	N1	N2	N3	N4	N5	N6	N7	N8	N9	N10	N11	N12
Ra µm	.025	.050	0.1	0.2	0.4	0.8	1.6	3.2	6.3	12.5	25	50
SYMBOL	▽▽▽▽			▽▽▽			▽▽			▽		~

ALT.NO.	ALTERATION	DATE	REASON	CHECKED BY SSE/VEH.	APPROVED BY DY.CDE/BOGIE
(b)	DRAWING CONVERTED INTO DLW FORMAT & NOTE ADDED.	-sd-	DRAWING MADE IN DLW FORMAT	-sd- 05.04.13	-sd- 05.04.13
(c)	NOTE-3 ADEED.	-sd-		-sd- 16.08.13	-sd- 16.08.13
(d)	NOTE 4 & 5 ADDED.	14/4/15	QUALITY IMPROVEMENT	14/4/15	14/4/15

ANNEXURE – J/2

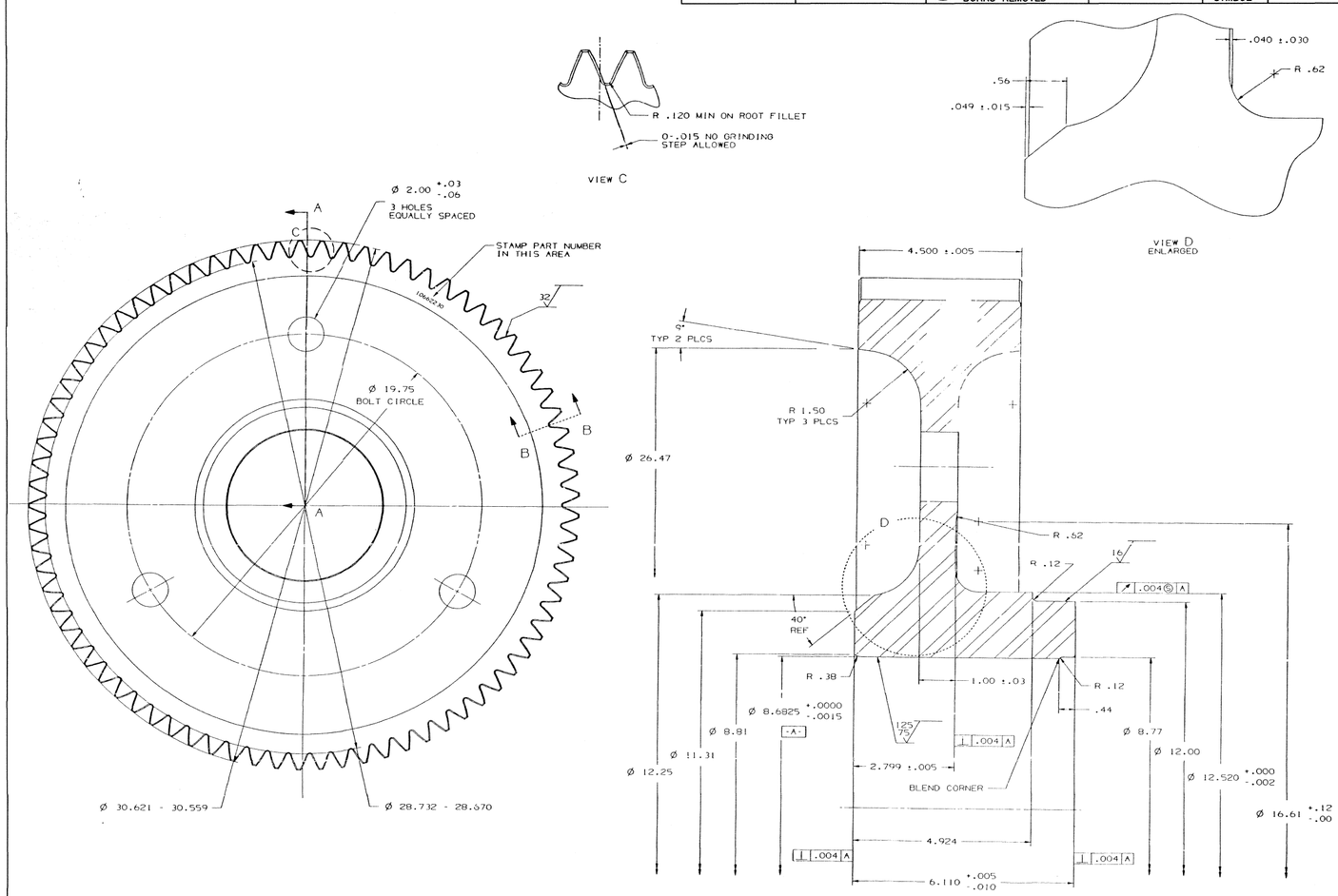

NUMBER OF TEETH	77
DIAMETRAL PITCH	2.5668
PRESSURE ANGLE	25.00°
PITCH DIAMETER	29.9984
BASE DIAMETER	27.1878
FORM DIAMETER	29.2668
ARC CIRCLE TOOTH THK-NORM AT PITCH DIAMETER	.512-.505
MEASUREMENT OVER TWO .750 DIAMETER PINS	30.988-30.971
RUNOUT TOLERANCE	.0042
PITCH TOLERANCE	.0008
LEAD TOLERANCE	.0010

MATERIAL:
EMS 157 STEEL FORGING

CARBURIZE TOOTH AND ROOT FOR .070 TO .105 FINISHED CASE DEPTH MEASURED TO HRC50 AT PITCH DIAMETER. QUENCH AND TEMPER AT 300°F MINIMUM TO OBTAIN HRC59-62 SURFACE HARDNESS AND HRC25 MINIMUM CORE HARDNESS AT INTERSECTION OF TOOTH CENTRELINE AND ROOT CIRCLE.

HARDNESS IN BORE TO BE HRC 50-58.

SHOT PEEN TEETH AND ROOT SECTION OF TEETH BEFORE GRINDING TOOTH PROFILES US-NO 5330 HARD SHOT TO OBTAIN 200% MINIMUM COVERAGE IN ROOT AREA. PEENING INTENSITY .007"-.010"C. MAGNAFLUX PER "FOR MANUFACTRUING".

ALL TOOTH ELEMENT SPECIFICATIONS ARE FROM THE AXIS -A-

(b)
NOTE:–

1. GEAR SHALL BE MANUFACTURED BY RDSO APPROVED OR RECOMMENDED VENDORS.
2. MANUFACTURER'S ID MARK,MONTH & YEAR OF MANUFACTURING SHOULD BE PUNCHED AT CLEARLY VISIBLE LOCATION.
3. (c) TECHNICAL REQUIREMENTS FOR MANUFACTURING OF GEARS & PINIONS AS PER STR No. MP.STR.EM.04.11.11 (Rev.–00) February"12.
4. (d) PAINTING: ONE COAT OF ANTI CORROSIVE RED OXIDE ZINC CHROMATE PRIMER CONFORMING TO IS: 2074 MUST BE DONE AFTER SHOT BLASTING (PRIOR TO MACHINING).
   MACHINING SURFACE TO BE SUITABLY PROTECTED AGAINST OXIDATION & CORROSION. ONE COAT OF ANTI CORROSIVE PAINT MUST BE APPLIED ON MACHINED SURFACE OF ANY REPUTED BRAND. SUCH COATING SHOULD BE REMOVED EASILY BY KEROSENE OIL OR WHITE SPIRIT.
   FINAL COMPONENT SHALL BE GIVEN A FINISH COAT OF 25 MICRON DFT SYNTHETIC ENAMEL TO IS:8662EXCEPT MACHINED SURFACE.
5. PACKING & TRANSPORTATION: MATERIAL TO BE SUPPLIED IN PROPER WOODEN PACKING & IT SHALL BE ENSURED THAT PACKING SHOULD BE WATERPROOF TO ENSURE DELIVERY AT DLW WITHOUT ANY TRANSIT DAMAGE. MARKING ON THE PACKING SHALL INCLUDE – MANUFACTURER'S NAME, DLW P.O. NO., DLW PART NO., BATCH/ LOT NO. & YEAR OF MANUFACTURING.

GLOBAL SOURCING SOURCE RECOMMENDATIONS (GSSR)
DESIGN SPECIFICATIONS, DIMENSIONS, AND REQUIREMENTS BASED UPON:
SUPPLIER NAME: FAIRFIELD MFG CO
SUPPLIER PART NO.: N/A
SUPPLIER NAME:
SUPPLIER PART NO.:
SUPPLIER NAME:
SUPPLIER PART NO.:
INDUSTRY STANDARD:
SHELF LIFE (DURATION):
SERVICEABLE PART: YES ( ) NO (X)

QTY./LOCO = 06

FOR MANUFACTURING	
PART I.D.	A.I. 1975
MAGNAFLUX SPEC.	E.T.I. 58

TOLERANCES ON ALL DIMENSIONS NOT SPECIFIED ON THE DRGS.TO BE IN ACCORDANCE WITH AI: 2400
BREAK ALL SHARP CORNERS UNLESS OTHERWISE SPECIFIED.

UNLESS OTHERWISE SPECIFIED,FOR DIAMETRAL FEATURES ROUNDNESS MUST BE WITHIN THE MMC & LMC BOUNDARY.SEPARATE TRUE POSITION CALLOUTS MAY BE GAGED SEPARATELY, REGARDLESS OF DATUM REFERENCE. PERFECT FORM REQUIRED FOR FEATURE OF SIZE AT MMC.

GEOMETRIC TOLERANCING SYMBOLS

FLAT / RUNOUT TOTAL RUNOUT ROUND
ANGULAR STRAIGHT TRUE POSITION CYLINDRICAL
CONCENTRIC PERPENDICULAR ø DIAMETER // PARALLEL
(M) MAXIMUM MATERIAL CONDITION(MMC) PROFILE OF A LINE
(L) LEAST MATERIAL CONDITION(LMC) PROFILE OF A SURFACES
(S) REGARDLESS OF FEATURE SIZES (RFS) .XX BASIC DIMENSION (41) DATUM TARGET
P PROJECTED TOLERANCE ZONE (PYZ) -A- DATUM IDENTIFICATION

NO. OFF	DESCRIPTION & DIMENSION	ITEM	PART NO.	DRG. NO.	Wt. /UNIT	MATERIAL	SPECIFICATION
	GEAR -77 T		18440046	10662230	-	STEEL FORGING	EMS-157

GROUP : MOTOR TRUCK

SUPERSEDED BY

SUPERSEDES

WDP4B/WDP4D LOCO

GEAR-77 T

SCALE

VERIFIED BY S. S. E. 14/4/15

PROJECTION

CHD. 04/12/15

DRN. 03/12/15

ALT. b c d

DIESEL LOCOMOTIVE WORKS VARANASI

PART NO. 18440046

DRG. NO: 10662230

26/10662498

Dy. CDE/BOGIE

ASSLY. PART NO.

ALL DIMENSIONS ARE IN INCHES
UNLESS OTHERWISE SPECIFIED.
ISSUING AUTHORITY : SSE/RECORDS

THIS DRAWING IS A PROPERTY OF DLW/INDIAN RAILWAYS AND ANY UNAUTHORISED USE OF THE DRAWING WILL BE CONSIDERED ILLIGAL AND DLW/INDIAN RAILWAYS WILL HAVE RIGHT TO INITIATE LEGAL PROCEEDINGS AGAINST THE DEFAULTERS.

Wt. /ASSLY.	f-1 FINISH ROUGH	(01) ROUGH CLEANING
	f-10 FLAME CUT	(1B) CHAMFERED
		(01h) BURRS REMOVED

SURFACE ROUGHNESS VALUE TO IS: 3073	GRADE.NO	N1	N2	N3	N4	N5	N6	N7	N8	N9	N10	N11	N12
	Ra µm	.025	.050	0.1	0.2	0.4	0.8	1.6	3.2	6.3	12.5	25	50
	SYMBOL	▽▽▽▽			▽▽▽▽			▽▽			▽		~

ALT.NO.	ALTERATION	DATE	REASON	CHECKED BY SSE/VEH.	APPROVED BY DY.CDE/BOGIE
(b)	DRAWING CONVERTED INTO DLW FORMAT & NOTE ADDED.	-sd-	DRAWING MADE IN DLW FORMAT	-sd- 15.11.10	-sd- 15.11.10
(c)	NOTE-3 & OEM VENDOR NAME ADEED.	-sd-		-sd- 16.08.13	-sd- 16.08.13
(d)	NOTE-4 TO 6 ADDED.	2/10/15	QUALITY IMPROVEMENT	2/10/15	2/10/15

ANNEXURE – J/3

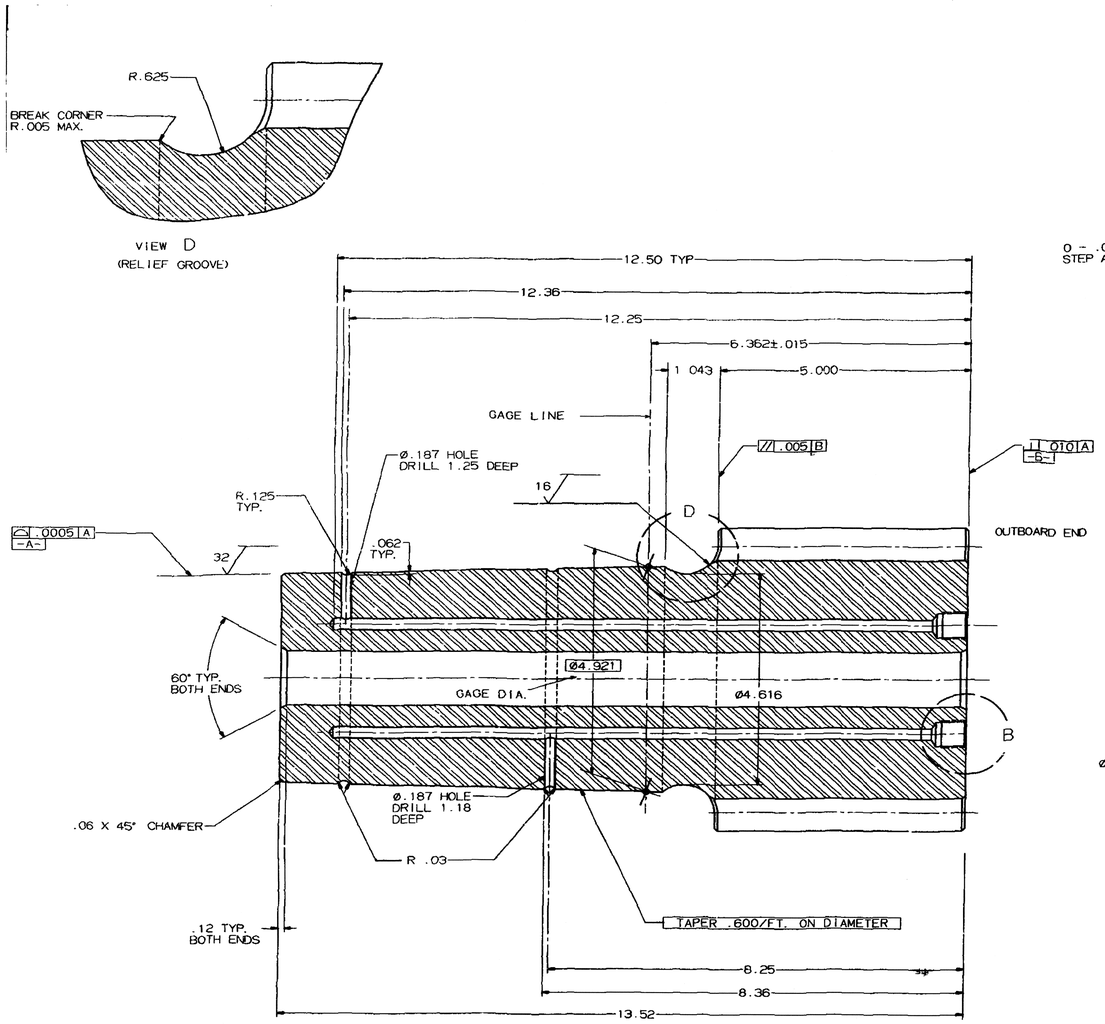

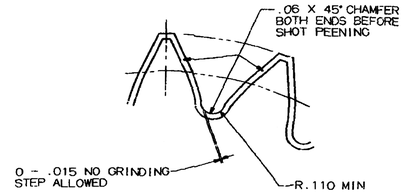

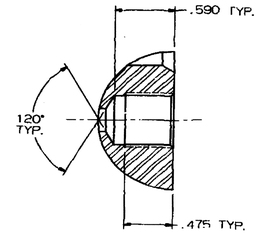

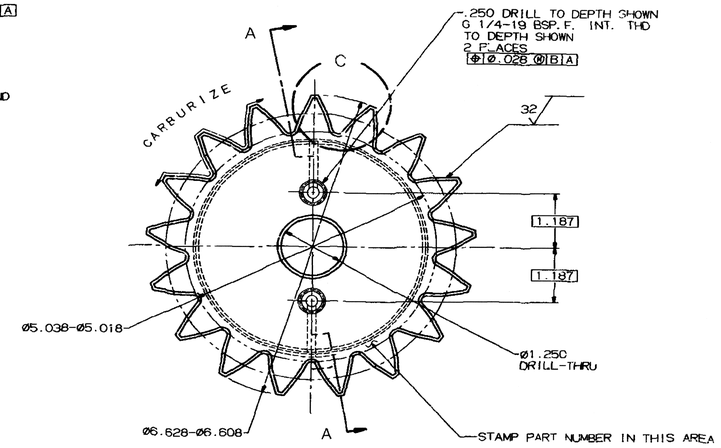

(b) NOTE:–

1. PINION SHALL BE MANUFACTURED BY RDSO APPROVED OR RECOMMENDED VENDORS.
2. MANUFACTURER'S ID MARK,MONTH & YEAR OF MANUFACTURING SHOULD BE PUNCHED AT CLEARLY VISIBLE LOCATION.
(c) 3. TECHNICAL REQUIREMENTS FOR MANUFACTURING OF GEARS & PINIONS AS PER STR No. MP.STR.EM.04.11.11 (Rev.–00) February"12.
(d) 4. PAINTING: ONE COAT OF ANTI CORROSIVE RED OXIDE ZINC CHROMATE PRIMER CONFORMING TO IS: 2074 MUST BE DONE AFTER SHOT BLASTING (PRIOR TO MACHINING).
MACHINING SURFACE TO BE SUITABLY PROTECTED AGAINST OXIDATION & CORROSION ONE COAT OF ANTI CORROSIVE PAINT MUST BE APPLIED ON MACHINED SURFACE OF ANY REPUTED BRAND. SUCH COATING SHOULD BE REMOVED EASILY BY KEROSENE OIL OR WHITE SPIRIT.
FINAL COMPONENT SHALL BE GIVEN A FINISH COAT OF 25 MICRON DFT SYNTHETIC ENAMEL TO IS:8662 EXCEPT MACHINED SURFACE.
5. PACKING & TRANSPORTATION: MATERIAL TO BE SUPPLIED IN PROPER WOODEN PACKING & IT SHALL BE ENSURED THAT PACKING SHOULD BE WATERPROOF TO ENSURE DELIVERY AT DLW WITHOUT ANY TRANSIT DAMAGE. MARKING ON THE PACKING SHALL INCLUDE – MANUFACTURER'S NAME, DLW P.O. NO., DLW PART NO., BATCH/ LOT NO. & YEAR OF MANUFACTURING.
6. SUITABLE PLASTIC CAPS SHOULD BE PROVIDED IN DRILLED/TAPPED HOLES.

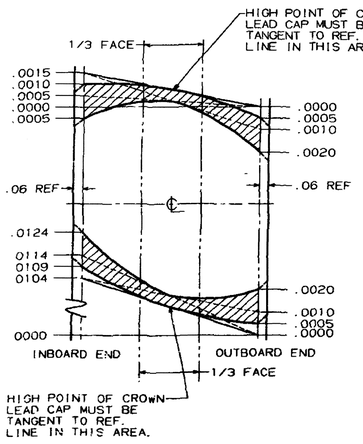

TOOTH TAPER AND CROWN DIMENSIONED IN PLANE TANGENT TO PITCH CIRCLE.

TOLERANCE BAND, CROWN AND LEAD

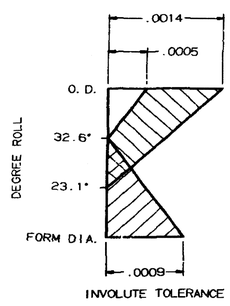

NUMBER OF TEETH	17
DIAMETRAL PITCH	2.9217
PRESSURE ANGLE	25.00°
PITCH DIAMETER	5.8185
BASE DIAMETER	5.2734
FORM DIAMETER	5.388
ARC CIRC TOOTH THK. - NORM AT PITCH DIAMETER AT OUTBOARD END.	.604- 597
MEASUREMENT OVER TWO .625 DIAMETER PINS AT OUTBOARD END.	6.828-6.816
RUNOUT TOLERANCE	.0027
PITCH TOLERANCE	0006

ALL TOOTH ELEMENT SPECIFICATIONS ARE FROM THE AXIS OF -A-

FINISH ALL OVER

MATERIAL: EMS 81 STEEL FORGING

HEAT TREATMENT

CARBURIZE AND HARDEN GEAR TEETH FOR .070-.090 FINISHED CASE DEPTH MEASURED AT PITCH LINE.

END FACES MAY ALSO BE CARBURIZED AND HARDENED. TAPPED HOLES SHALL NOT BE CARBURIZED.

TEMPER 300°F MIN.
RC 60 MINIMUM @ TOOTH SURFACE
RC 25 MINIMUM @ INTERSECTION OF TOOTH ℄ AND ROOT RADIUS.
RC 28-38 @ SURFACE OF RELIEF GROOVE (SHOWN IN VIEW D), AND ALONG SHAFT TAPER.

SHOT PEEN TOOTH ROOT & FILLET RADIUS BEFORE GRINDING TEETH. USE S330 HARD SHOT TO OBTAIN 200% MINIMUM COVERAGE IN ROOT AREA. PEENING INTENSITY .007-.010 C.

MAGNAFLUX INSPECT PER E. T. I. -57

DESIGN SPECIFICATIONS, DIMENSIONS, AND REQUIREMENTS BASED UPON:	
INDUSTRY STANDARD:	
VENDOR NAME: FAIRFIELD MFG CO	
VENDOR PART NO.: N/A	
VENDOR NAME:	
VENDOR PART NO.:	
VENDOR NAME:	
VENDOR PART NO.:	
VENDOR NAME:	
VENDOR PART NO.:	
ENGINEERING IDENTIFIES THIS ITEM AS A SERVICEABLE PART:	
ENGINEERING IDENTIFIES THIS ITEM AS HAVING A SHELF LIFE:	

QTY. /LOCO = 06

NO. OFF	DESCRIPTION & DIMENSION	ITEM	PART NO.	DRG. NO.	Wt. /UNIT	MATERIAL	SPECIFICATION
1	PINION 17 TEETH		18440010	40074147	73.6 LBS	STEEL FORGING	EMS-81

TOLERANCES ON ALL DIMENSIONS NOT SPECIFIED ON THE DRGS.TO BE IN ACCORDANCE WITH AI:2400 BREAK ALL SHARP CORNERS UNLESS OTHERWISE SPECIFIED.

UNLESS OTHERWISE SPECIFIED,FOR DIAMETRAL FEATURES ROUNDNESS MUST BE WITHIN THE MMC & LMC BOUNDARY.SEPARATE TRUE POSITION CALLOUTS MAY BE GAGED SEPARATELY, REGARDLESS OF DATUM REFERENCE. PERFECT FORM REQUIRED FOR FEATURE OF SIZE AT MMC.

GEOMETRIC TOLERANCING SYMBOLS
FLAT / RUNOUT TOTAL RUNOUT ROUND
ANGULAR STRAIGHT TRUE POSITION CYLINDRICAL
CONCENTRIC PERPENDICULAR Ø DIAMETER PARALLEL
MAXIMUM MATERIAL CONDITION(MMC) PROFILE OF A LINE
LEAST MATERIAL CONDITION(LMC) PROFILE OF A SURFACES
REGARDLESS OF FEATURE SIZES (RFS) .XX BASIC DIMENSION
PROJECTED TOLERANCE ZONE (PYZ) -A- DATUM IDENTIFICATION

Dy. CDE/BOGIE

2/40075428
ASSLY. PART NO.

WDG4/WDG4D QTY. /ASSLY.

GROUP : MOTOR TRUCK

SUPERSEDED BY

SUPERSEDES

PINION–17 TEETH

SCALE

VERIFIED BY SSE/V

PROJECTION

CHD.

DRN.

ALT. b c d

DIESEL LOCOMOTIVE WORKS VARANASI

PART NO: 18440010

DRG. NO: 40074147

THIS DRAWING IS A PROPERTY OF DLW/INDIAN RAILWAYS AND ANY UNAUTHORISED USE OF THE DRAWING WILL BE CONSIDERED ILLIGAL AND DLW/INDIAN RAILWAYS WILL HAVE RIGHT TO INITIATE LEGAL PROCEEDINGS AGAINST THE DEFAULTERS.

ISSUING AUTHORITY : SSE/RECORDS

ALL DIMS. ARE IN INCHES.

Wt. /ASSLY.	f-1 FINISH ROUGH	01 ROUGH CLEANING
Kg	f-10 FLAME CUT	1B CHAMFERED
		01b BURRS REMOVED

SURFACE ROUGHNESS VALUE TO IS: 3073														
GRADE.NO	N1	N2	N3	N4	N5	N6	N7	N8	N9	N10	N11	N12
Ra µm	.025	.050	0.1	0.2	0.4	0.8	1.6	3.2	6.3	12.5	25	50
SYMBOL	▽▽▽▽			▽▽▽			▽▽			▽		~

ALT.NO.	ALTERATION	DATE	REASON	CHECKED BY SSE/VEH.	APPROVED BY DY.CDE/BOGIE
b	DRAWING CONVERTED INTO DLW FORMAT & NOTE ADDED.	-sd-	DRAWING MADE IN DLW FORMAT	-sd- 05.04.13	-sd- 05.04.13
c	NOTE-3 ADDED.	-sd-		-sd- 16.08.13	-sd- 16.08.13
d	NOTE-4 ADDED AND SURFACE FINISH SYMBOL RELOCATED. AUTH:-LETTER No. CME (P)/ DLW/NOTES DT. 20.08.14.	-sd-		-sd- 04.09.14	-sd- 04.09.14
e	NOTE 5 & 6 ADDED.	14/11/15	QUALITY IMPROVEMENT	14/11/15	14/11/15

ANNEXURE – J/4

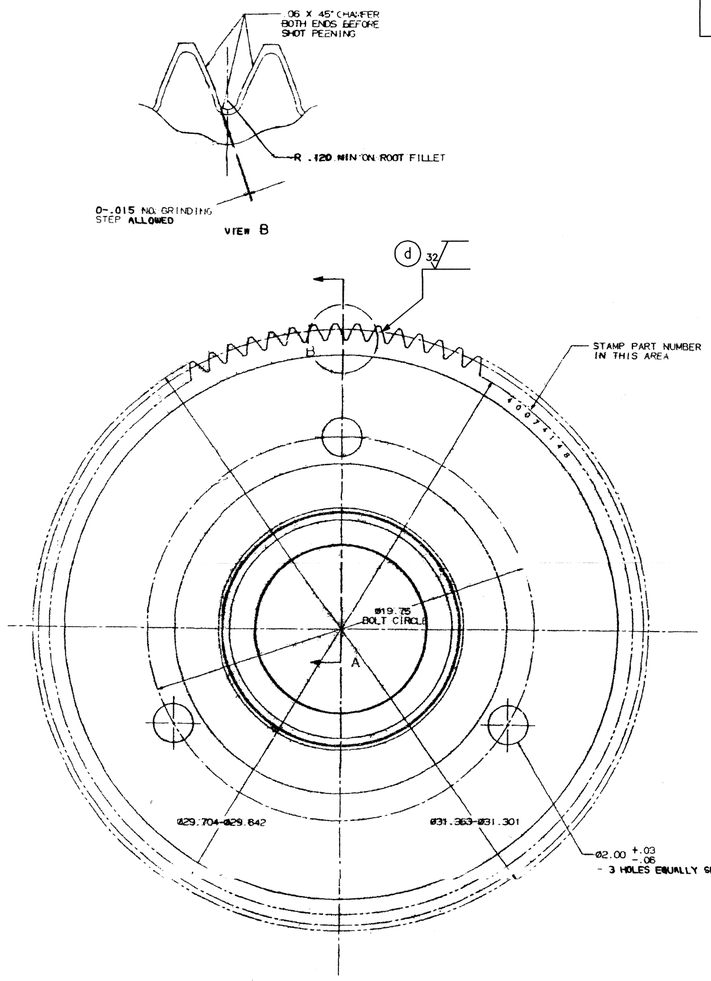

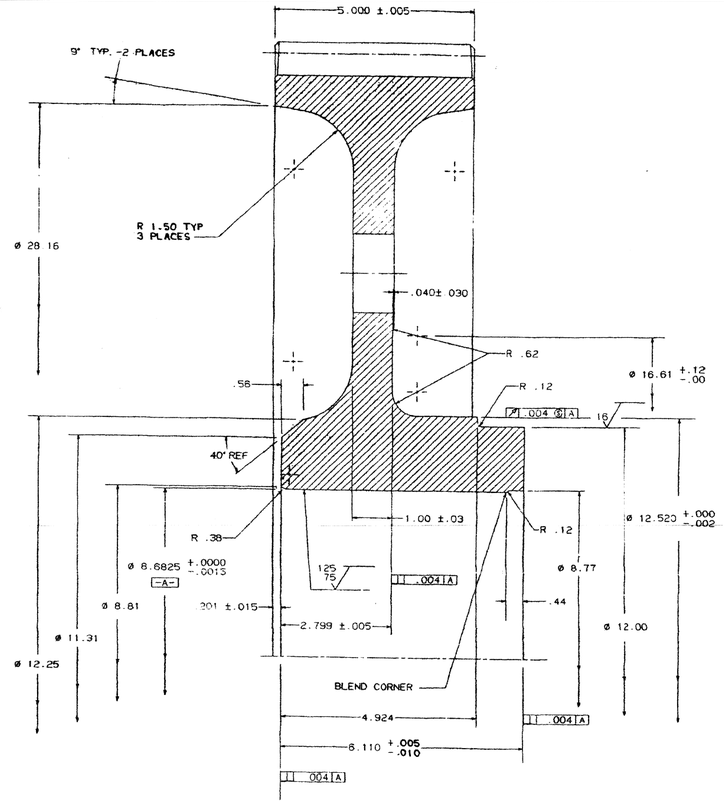

NOTE:-

b

1. GEAR SHALL BE MANUFACTURED BY RDSO APPROVED OR RECOMMENDED VENDORS.
2. MANUFACTURER'S ID MARK,MONTH & YEAR OF MANUFACTURING SHOULD BE PUNCHED AT CLEARLY VISIBLE LOCATION.
3. (c) TECHNICAL REQUIREMENTS FOR MANUFACTURING OF GEARS & PINIONS AS PER STR No. MP.STR.EM.04.11.11 (Rev.-00) February"12.
4. (d) SUPPLIER SHOULD APPLY ANTI CORROSIVE PAINT ON MACHINED SURFACE OF GEAR.
5. (e) PAINTING: ONE COAT OF ANTI CORROSIVE RED OXIDE ZINC CHROMATE PRIMER CONFORMING TO IS: 2074 MUST BE DONE AFTER SHOT BLASTING (PRIOR TO MACHINING).
   MACHINING SURFACE TO BE SUITABLY PROTECTED AGAINST OXIDATION & CORROSION. ONE COAT OF ANTI CORROSIVE PAINT MUST BE APPLIED ON MACHINED SURFACE OF ANY REPUTED BRAND. SUCH COATING SHOULD BE REMOVED EASILY BY KEROSENE OIL OR WHITE SPIRIT.
   FINAL COMPONENT SHALL BE GIVEN A FINISH COAT OF 25 MICRON DFT SYNTHETIC ENAMEL TO IS:8662 EXCEPT MACHINED SURFACE.
6. PACKING & TRANSPORTATION: MATERIAL TO BE SUPPLIED IN PROPER WOODEN PACKING & IT SHALL BE ENSURED THAT PACKING SHOULD BE WATERPROOF TO ENSURE DELIVERY AT DLW WITHOUT ANY TRANSIT DAMAGE. MARKING ON THE PACKING SHALL INCLUDE – MANUFACTURER'S NAME, DLW P.O. NO., DLW PART NO., BATCH/ LOT NO. & YEAR OF MANUFACTURING.

MATERIAL:
EMS 157 STEEL FORGING.

CARBURIZE TOOTH AND ROOT FOR .070 TO .105 FINISHED CASE DEPTH MEASURED TO HRC50 AT PITCH DIAMETER. QUENCH AND TEMPER AT 300°F MINIMUM TO OBTAIN HRC58-62 SURFACE HARDNESS AND HRC25 MINIMUM CORE HARDNESS AT INTERSECTION OF TOOTH CENTERLINE AND ROOT CIRCLE

HARDNESS IN BORE TO BE HRC 50-58

SHOT PEEN TEETH AND ROOT SECTION OF TEETH BEFORE GRINDING TOOTH PROFILES USING S330 HARD SHOT TO OBTAIN 200% MINIMUM COVERAGE IN ROOT AREA. PEENING INTENSITY .007-.010 C. MAGNAFLUX PER 'FOR MANUFACTURING'.

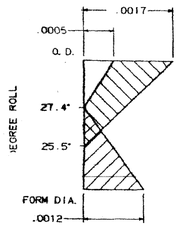

INVOLUTE TOLERANCE

NUMBER OF TEETH	90
DIAMETRAL PITCH	2.9217
PRESSURE ANGLE	25.00°
PITCH DIAMETER	30.8039
BASE DIAMETER	27.918
FORM DIAMETER	30.182
ARC CIRC TOOTH THK - NORM AT PITCH DIAMETER	.456 - .449
MEASUREMENT OVER TWO .625 DIAMETER PINS	31.578 - 31.563
RUNOUT TOLERANCE	.0040
PITCH TOLERANCE	.0008
LEAD TOLERANCE	.0010

ALL TOOTH ELEMENT SPECIFICATIONS ARE FROM THE AXIS OF -A-

DESIGN SPECIFICATIONS, DIMENSIONS, AND REQUIREMENTS BASED UPON:
INDUSTRY STANDARD:
VENDOR NAME:
VENDOR PART NO. :
VENDOR NAME:
VENDOR PART NO. :
VENDOR NAME:
VENDOR PART NO. :
VENDOR NAME:
VENDOR PART NO. :
ENGINEERING IDENTIFIES THIS ITEM AS A SERVICEABLE PART:
ENGINEERING IDENTIFIES THIS ITEM AS HAVING A SHELF LIFE:

QTY. /LOCO=06

FOR MANUFACTURING	
PART I.D.	A.I. 1975
MAGNAFLUX SPEC.	E.T.I. 58

NO. OFF	DESCRIPTION & DIMENSION	ITEM	PART NO.	DRG. NO.	Wt. /UNIT	MATERIAL	SPECIFICATION
	GEAR -90 T		18440022	40074148	-	STEEL FORGING	EMS-157

TOLERANCES ON ALL DIMENSIONS NOT SPECIFIED ON THE DRGS.TO BE IN ACCORDANCE WITH AI: 2400
BREAK ALL SHARP CORNERS UNLESS OTHERWISE SPECIFIED.

UNLESS OTHERWISE SPECIFIED,FOR DIAMETRAL FEATURES ROUNDNESS MUST BE WITHIN THE MMC & LMC BOUNDARY.SEPARATE TRUE POSITION CALLOUTS MAY BE GAGED SEPARATELY, REGARDLESS OF DATUM REFERENCE. PERFECT FORM REQUIRED FOR FEATURE OF SIZE AT MMC.

GEOMETRIC TOLERANCING SYMBOLS

FLAT / RUNOUT TOTAL RUNOUT ROUND
ANGULAR — STRAIGHT TRUE POSITION CYLINDRICAL
CONCENTRIC ⊥ PERPENDICULAR ø DIAMETER // PARALLEL
Ⓜ MAXIMUM MATERIAL CONDITION(MMC) PROFILE OF A LINE
Ⓛ LEAST MATERIAL CONDITION(LMC) PROFILE OF A SURFACES
Ⓢ REGARDLESS OF FEATURE SIZES (RFS) .XX BASIC DIMENSION DATUM TARGET
P PROJECTED TOLERANCE ZONE (PYZ) -A- DATUM IDENTIFICATION

WDG4/WDG4D LOCO

GROUP : MOTOR TRUCK

SUPERSEDED BY

SUPERSEDES

SCALE

VERIFIED BY S. S. E.

PROJECTION

CHD.

DRN.

ALT. b c d e

GEAR-90 T

DIESEL LOCOMOTIVE WORKS VARANASI

PART NO. 18440022

DRG. NO: 40074148

Dy. CDE/BOGIE

26/40076742

ASSLY. PART NO.

ALL DIMENSIONS ARE IN INCHES UNLESS OTHERWISE SPECIFIED.
ISSUING AUTHORITY : SSE/RECORDS

THIS DRAWING IS A PROPERTY OF DLW/INDIAN RAILWAYS AND ANY UNAUTHORISED USE OF THE DRAWING WILL BE CONSIDERED ILLIGAL AND DLW/INDIAN RAILWAYS WILL HAVE RIGHT TO INITIATE LEGAL PROCEEDINGS AGAINST THE DEFAULTERS.

ANNEXURE – K

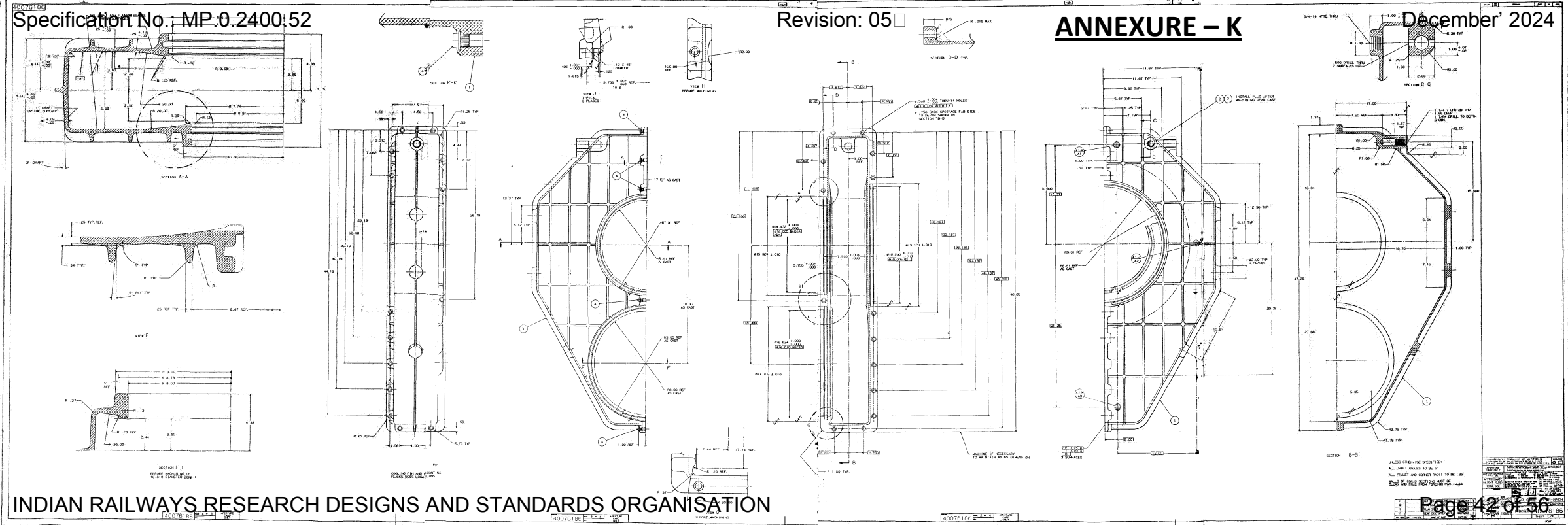
SECTION A-A
SECTION K-K
VIEW J
TYPICAL
9 PLACES
VIEW H
BEFORE MACHINING
SECTION D-D TYP.
SECTION C-C
VIEW E
SECTION F-F
BEFORE MACHINING OF
TO .819 DIAMETER BORE
COOLING FIN AND MOUNTING
FLANGE BODY LOCATING
BEFORE MACHINING
INSTALL PLUG AFTER
MACHINING GEAR CASE
SECTION B-B
UNLESS OTHERWISE SPECIFIED:
ALL DRAFT WALLS TO BE 0°
ALL FILLET AND CORNER RADII TO BE .25
WALLS OF CAST SECTIONS MUST BE
CLEAN AND FREE FROM FOREIGN PARTICLES

Intentions of Rationalization: 3-phase Tractionmotors with insulationsystem 2,3 kV

(according to IEC 2J(C0)6 and VDE 530 part 22)

ANNEXURE – L

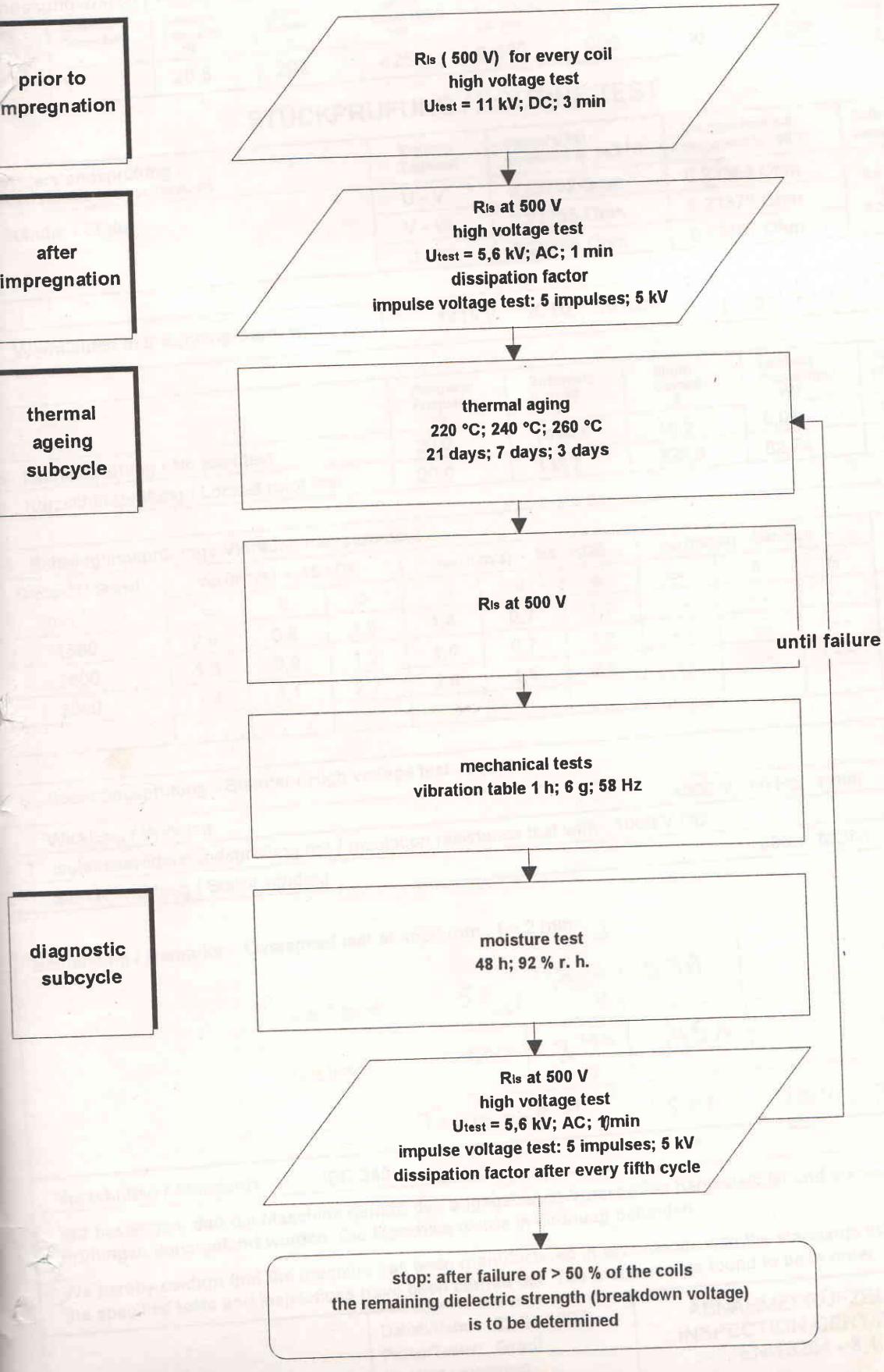

443072

ANNEXURE - M

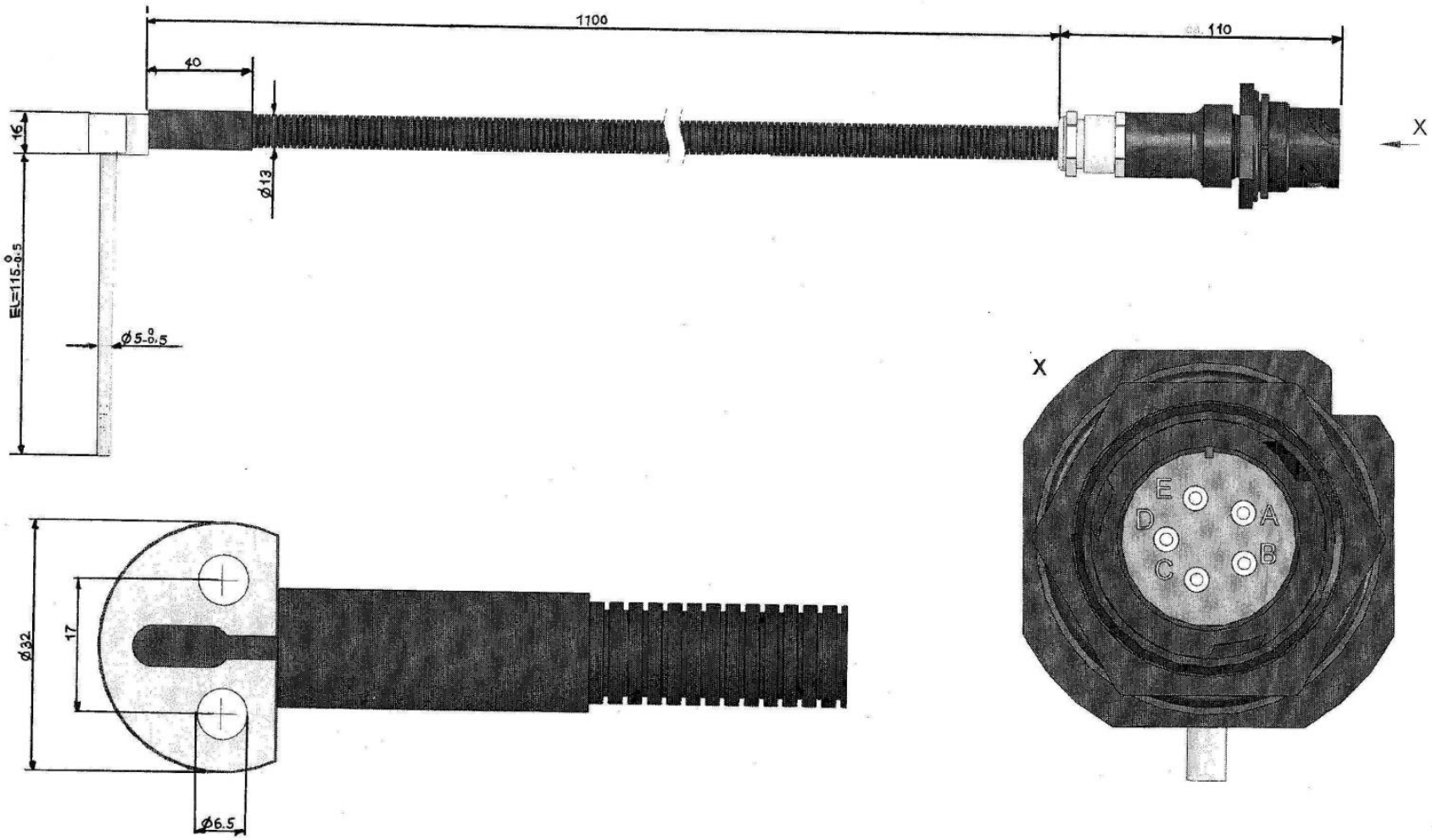

Mounting Arrangement of Temperature Sensors for Traction Motor

ANNEXURE - N

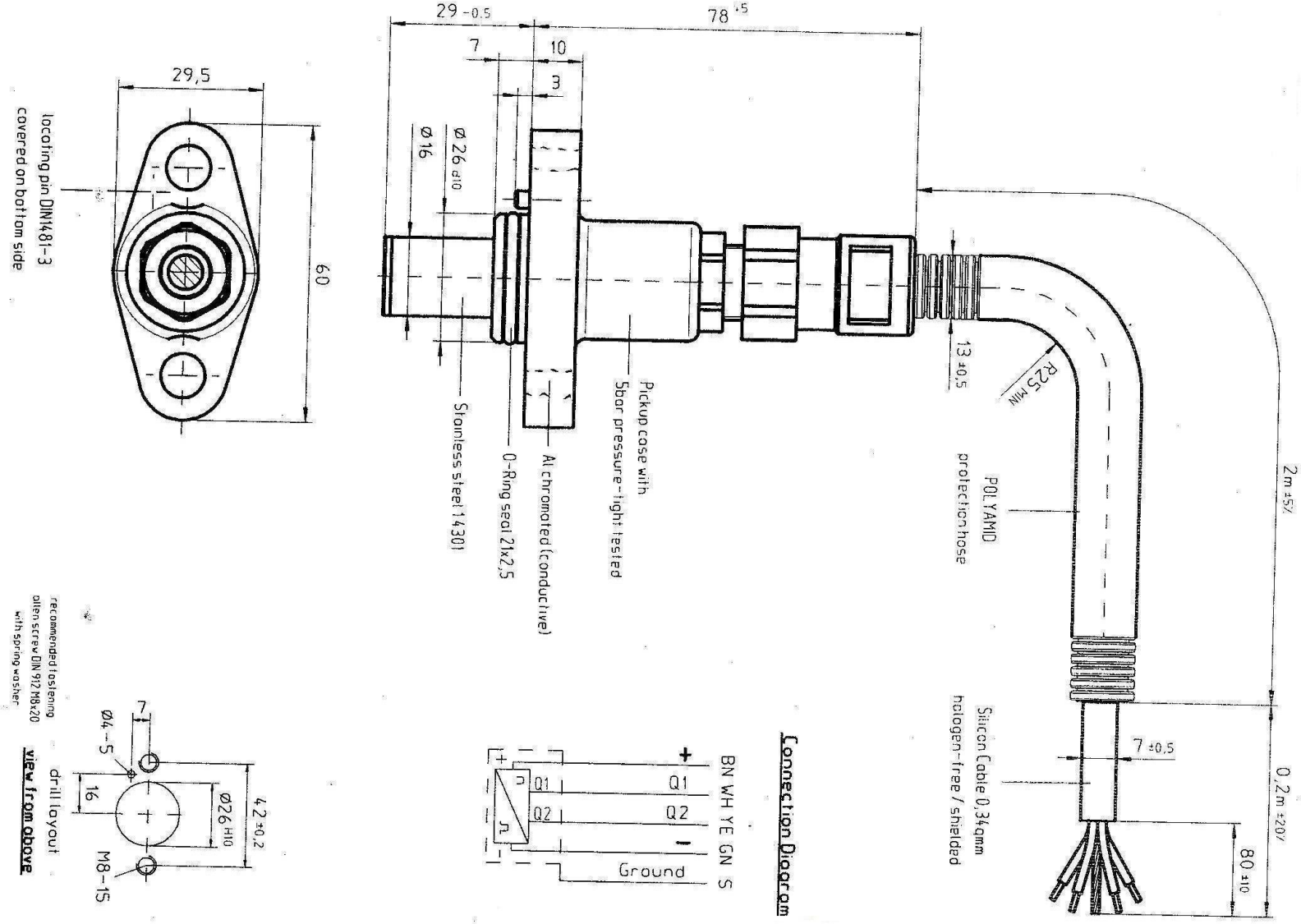

Mounting Arrangement of Speed Sensors for Traction Motor

ANNEXURE – O

TYPE AND ROUTINE TEST SCHEDULE OF 3-PHASE ASYNCHRONOUS TRACTION MOTOR FOR 4000/4500hp BROAD GAUGE DIESEL ELECTRIC HHP LOCOMOTIVES

GENERAL INFORMATION

This document shows the measurements for the type and routine test. These measurements should be carried out at one of the first 10 motors manufactured.

The schedule includes tests required according to IEC 60349-2 and investigation tests. The acceptance limit shall be as per IEC 60349-2. Investigation tests are performed to obtain additional information.

A. TYPE TEST:-

1.0 Measurement of Stator Resistance.

Record stator cold resistance for all the three phases and ambient temperature at a cold motor.

~~[Limits : Line to Line Resistance : 231.2 milli ohms ± 3% at 20 ºC including motor cables]~~

[Limits : Line to Line Resistance should not exceed 231.2 milli ohms+ 5% at 20° C including motor cables. Allowed Variation within the line to line resistances of the motor should be defined by manufacturer as per their design before prototype test.]

2.0 Measurement of Stator Impedance.

Record Stator impedance for all the three phases on 50 Hz sinusoidal supply at 10, 20 and 30 Amp along with measurement of ambient and core temperature of the motor.

3.0 Air Measurement.

Record the pressure-volume characteristics $\Delta p = f(Q)$ at n=0 rpm

(Q = 0.05, 0.25, 0.50, 0.75, 1.00, 1.25 m^3/s)

Acceptable Limit : Q=1.0 m^3/s at air inlet static pressure of 1600 Pa.

4.0 Measurements on Sinusoidal Voltage

The motor will run the tests under point 4 to 10 without a gear unit. Cooling air flow has to be Q=1.0 m^3/s. If, under clause 4.4 and 4.5, it is not possible to run the motor at load

FINAL DRAFT CHANGES

at 20 and 70 Hz at this voltage, equivalent load and temperature rise test at 50 Hz shall be done.

4.1 Direction of rotation.

Record direction of rotation. It should be CLOCKWISE when looking from drive end (pinion) with U-V-W phase of motor connected to R,Y, B of supply.

4.2 No Load Measurements. (to IEC 60349-2, 9.3.1 / Investigation Test)

Record the characteristics P_{input} ,CosØ, U_o= f(I_o) at various frequencies and measure winding resistance at begin and end of test:

f_1 = 20 Hz I_o = 15 ,30 , 45, 60, 75, 90 A and at U_o=1415 V

f_1 = 50 Hz I_o = 6, 12, 18, 24, 30, 36 A and at U_o=1830 V

f_1 = 70 Hz I_o = 4, 8, 12, 16, 20, 24 A and at U_o=1680 V

Actual value : Reference Value (for 50 Hz and U_o = 1830 V) ± 10%

Take care of maximum voltage U_1 ≤ 2500 V for no-load test.

4.3 Locked Rotor Measurements (to IEC 60349-2, 9.3.1 / Investigation Test)

Record the characteristics P_{input} ,CosØ, U_k= f(I_k) at various frequencies and measure winding resistance at begin and end of test::

f_1 = 20 Hz I_k = 60, 120, 180, 240, 300, 360 A

f_1 = 50 Hz I_k = 30, 60, 90, 120, 150, 180 A and at U_k= 346 V

f_1 = 70 Hz I_k = 30, 60, 90, 120, 150, 180 A

Actual value : Reference Value (for 50 Hz and U_k= 346 V) ± 10%.

4.4 Load Characteristics Test (to IEC 60349-2, 8.2)

Record the characteristics P_{input} ,CosØ, U_1, I_1 , slip and speed at various frequencies and measure winding resistance at begin and end of test. The losses are determined from the load characteristics and no-load measurement (actual value).

f_1 = 20 Hz; U_1 =1480 V P_{input} = 200, 300, 400, 470, 540, 600 kW (if possible)

FINAL DRAFT CHANGES

f_2 = 50 Hz; U_2 =1910 V P_{input} = 250, 350, 450, 550, 650, 750 kW

f_3 = 70 Hz ; U_3 =1910 V P_{input}= 250, 350, 450, 550, 650, 750 kW (if possible)

Reference value : calculated values at full load

Actual value : Reference Value lossess + max. 15%, reference value torque – max. 5%

4.5 Temperature Rise Test. (to IEC 60349-2, 8.1)

Measured during temperature rise test:

-Air intake and exhaust temperature,
- Stator temperature curve with PT100 (RTD)
- P_{input} , slip and frequency , U , I , RPM
-Temperature of outer bearing ring
-Temperature of short circuit ring DE and NDE and temperature of shaft at DE (after shutdown)
-Stator winding resistance rise (after shutdown)

Run the motor at following input voltage, current and frequency on sinusoidal supply with full cooling air, i.e. 1.0 m^3/s at inlet static pressure of1600 Pascal.

Temperature Rise Test at 20Hz :

U = 1520 V (Sine), I = 202 A, f = 20.6Hz, P_{input}= 465 kW, N = 600 RPM
Calculated Losses: 40 kW
Expected temperature rise in stator winding at 20°C ambient and Q = 1.0m^3/s:
ΔT= 132 K
Limits: Mean temperature rise of the stator winding: ≤ 200°C (IEC 60349-2)

Temperature Rise Test 1 at 50Hz :

U = 1910 V (Sine), I = 194 A, f = 50 Hz, P_{input}= 600 kW, N = 1460 RPM
Calculated Losses: 44 kW
Expected temperature rise in stator winding at 20°C ambient and Q = 1.0m^3/s:
ΔT= 124 K
Limits: Mean temperature rise of the stator winding: ≤ 200°C (IEC 60349-2)

To show the correction between stator RTD and winding temperature measured by resistance, two additional heat run tests shall be done with a warm motor after test 1 at 50Hz.

Temperature Rise Test 2 at 50Hz :

FINAL DRAFT CHANGES

U = 1910 V (Sine), I = 211 A, f = 50 Hz, P_{input}= 650 kW, N = 1460 RPM
Calculated Losses: 52 kW
Expected temperature rise in stator winding at 20°C ambient and Q = 1.0m^3/s:
ΔT= 154 K
Limits: Mean temperature rise of the stator winding: ≤ 200°C (IEC 60349-2)

Temperature Rise Test 3 at 50Hz :

U = 1910 V (Sine), I = 228 A, f = 50 Hz, P_{input}= 700 kW, N = 1460 RPM
Calculated Losses: 60 kW
Expected temperature rise in stator winding at 20°C ambient and Q = 1.0m^3/s:
ΔT= 191 K
Limits: Mean temperature rise of the stator winding: ≤ 200°C (IEC 60349-2)

4.6 Short Time Thermal Test / Heat Run Test. (to IEC 60349-2, 7.1.2.2)

Run the motor at rated voltage, rated frequency and short time current rating (i.e, max. current) on sinusoidal supply (or on converter supply) with full cooling air, i.e. 1.0 m3/s at 1600 Pascal for 3 minute.

Limits: Mean temperature rise of the stator winding after the test: ≤ 200°C (IEC 60349-2)

4.7 Shaft Voltage Measurement

Measure the shaft voltage on sinusoidal supply at no load between DE to NDE, DE to frame, NDE to frame at following points:

f = 20 Hz and U_o = 1415 V

f = 50 Hz and U_o = 1830 V

f = 70 Hz and U_o = 1680 V

5.0 Over speed Test. (to IEC 60349-2, 8.3)

Measure the diameter before and after the over speed test at the cold motor.

n = 1.2 * n_{max} = 1.2 * 3780 RPM = 4550 RPM. Duration t = 2 min. (The speed of 3780 RPM is the designed speed of this motor family)

The subsequent High Voltage Test to clause 6 must be passed.

6.0 Dielectric Test. (to IEC 60349-2)

Apply U_t = 6.2 kV, 50 Hz for 1 min.

[The test voltage is derived as U_t= 2 x U_{dc} + 1000 V. The DC-link voltage is 2600V.]

FINAL DRAFT CHANGES

7.0 Insulation/Dielectric Resistance

Measure the insulation resistance with U = 1000 V DC megger.

Reference value ≥ 10 MΩ

8.0 Polarization index test.

Record the value of winding IR after 1 minute and again after 10 minute. The 10 minute reading is divided by the 1 minute reading. Acceptable limit : ≥ 2.

9.0 Vibration Test. (to IEC 60349-2, 8.4)

The motor must run smoothly throughout the type test measurement when mounted on the test bed. To show compliance with above requirement, the following measurements should be applied to the typetest motor

Measure velocity of vibration Vrms in the range n = 1000 RPM to n = 3300 RPM in increments of 500 rpm.

Speed range	Permissible vibration value (See also IEC 34-14)	
	Frame-less design	**Framed motor**
0 to 1800RPM	≤ 2.8 mm/s	≤ 3.5 mm/s
1800 to 3600 RPM	≤ 4.5 mm/s	≤ 3.5 mm/s
greater than 3600 RPM	≤ 6.75 mm/s	-

10.0 Noise Measurement (to IEC 60349-2, Annexure-C)

RPM	3300	3800
Limit (DB)	111	113

Measure the sound pressure level in db at no load condition in a distance of 1m at n = 3300 rpm and n = 3800 rpm.

Acceptable Limit : Cl. no. C.8, Figure C-1 of IEC :

11.0 Weight of Motor.

Take the weight of the motor (without pinion or coupling)

Acceptable limit as per cl no. 5.6 of specification : ~~≤ 2125 kg~~ 2120±2% kg

FINAL DRAFT CHANGES

12.0 Visual inspection and dimensional check

A. Visually inspect the machine.

B. Report of mounting dimension shall be furnished.

Acceptance limit as per Cl no. 5.5, 5.7, 5.17, 5.19, 5.20 and Annexure-I

B. Routine Test

1.0 Measurement of Stator Resistance.

Record stator cold resistance for all the three phases and ambient temperature at a cold motor.

~~[Limits : Line to Line Resistance : 231.2 milli ohms ± 3% at 20 °C including motor cables]~~

[Limits : Line to Line Resistance should not exceed 231.2 milli ohms+ 5% at 20° C including motor cables. Allowed Variation within the line to line resistances of the motor should be defined by manufacturer as per their design before prototype test.]

2.0 Measurements on Sinusoidal Voltage

The motor will run the tests without a gear unit. Cooling air flow has to be Q=1.0 m^3/s. Requirement of air flow for motor cooling is optional for these short duration tests to check its working.

2.1 Direction of rotation.

Record direction of rotation. It should be CLOCKWISE when looking from drive end (pinion) with U- V-W phase of motor connected to R,Y, B of supply.

2.2 No Load Measurements. (to IEC 60349-2, 9.3.1 / Investigation Test)

Record P_{input} and I_o at f_1 = 20 Hz and U_o=1415 V

Reference Value : mean current value of the first 4 machines : 76.35 A

Actual value : Reference Value ± 10%

2.3 Locked Rotor Measurements (to IEC 60349-2, 9.3.1 / Investigation Test)

Record P_{input} and $I_k$at f_1 = 20 Hz and U_k= 332 V

Reference Value : mean current value of the first 4 machines : 319.2 A

Actual value : Reference Value ± 5%

FINAL DRAFT CHANGES

~~**2.4 Short Time Thermal Test / Heat Run Test. (to IEC 60349-2, 9.1, OPTIONAL)**~~

~~Run the motor at rated voltage, rated frequency and short time current rating (i.e, max. current) on sinusoidal supply (or on converter supply) with full cooling air, i.e. 1.0 m3/s at 1600 Pascal for 3 minute.~~

~~Limits: Mean temperature rise of the stator winding after the test: ≤ 200°C (IEC 60349-2)~~

3.0 Over speed Test. (to IEC 60349-2, 9.4)

Over speed test with n = 4550 rpm for 2 min. The subsequent High Voltage Test to clause 4 must be passed.

4.0 Dielectric Test. (to IEC 60349-2 , 9.5)

Apply U_t = 6.2 kV, 50 Hz for 1 min.

5.0 Insulation/Dielectric Resistance

Measure the insulation resistance with U = 1000 V DC megger.

Reference value ≥ 10 MΩ

6.0 Vibration Test. (to IEC 60349-2, 9.6)

Measure velocity of vibration Vrms at n = 1800, 2600, 3300 RPM ~~Vrms in the range n = 1000 RPM to n = 3300 RPMin increments of 500 rpm.~~

Speed range	Permissible vibration value (See also IEC 34-14)	
	Frame-less design	**Framed motor**
0 to 1800RPM	≤ 2.8 mm/s	≤ 3.5 mm/s
1800 to 3600 RPM	≤ 4.5 mm/s	≤ 3.5 mm/s
greater than 3600 RPM	≤ 6.75 mm/s	-

FINAL DRAFT CHANGES

PART – B

SCHEDULE OF TECHNICAL REQUIREMENTS (STR) FOR MANUFACTURING, TESTING AND QUALITY CONTROL

FINAL DRAFT CHANGES

MACHINERY & PLANT REQUIRED FOR MANUFACTURING

The following is the indicative list of machining facilities to be available with the firm:-

1. MIG welding facility ~~plant suitable for 3 phase traction motor~~
2. Paint/varnish Spray booth.
3. Dynamic balancing machine.
4. Shot Blasting (Required for Heat treatment).*
5. Hydraulic system for pinion extraction Mounting & hydraulic jack.
6. Fork lift truck.
7. ~~Portable MIG welding machine~~.
8. Baking Ovens w ith automatic temperature control
9. Radial drilling machine.
10. Hydraulic press Machine.
11. Vacuum Pressure Impregnation plant
12. Vertical Milling Machine.
13. Horizontal Milling Machine.
14. Heavy Duty Turning Lathes.
15. CNC turning lathes for rotor shafts & rotor complete.
16. Coil winding machine, Coil Spreading Machine, Coil Moulding press Machine, ~~Automatic~~ Coil formatting, looping & tapping ~~for 3 phase Traction motor~~
17. Induction Heater with temperature control for bearings.
18. Crane (05 Ton).
19. CNC Universal Grinding Machine.
20. Induction brazing machine for stator leads.
21. Air compressor.
22. Induction brazing machine for rotor.
23. Induction heater for ~~Stampings &~~ bearings with temperature control.
24. Heat treatment furnace fitted with Thermocouple and Pyrometer etc. with Auto cut in and cut off and with strip chart capable to go up to 650°C and with digital display.
25. Templates, Jigs and Fixtures for cutting plates as per required geometry.
26. Facilities for stamping of identification marking ~~as per specification~~.
27. CNC turning centre.
28. Plano miller/Big size vertical milling machine for edge operation.
29. ~~Facility for Annealing of leads~~.
30. Pullers for mounting & Dismounting of roller bearings.
31. ~~Induction brazing machine for leads connection~~.
32. Stands for stator & rotor winding.
33. Air-conditioned room for winding insulation of coil.

FINAL DRAFT CHANGES

LIST OF TESTING FACILITIES FOR STAGE & FINAL TESTING

1. 3-ph variable voltage transformer.
2. Dielectric testing machine
3. Surge comparison tester.
4. No load test bed, 3300V motor alternator set and load test bed along with VVVF facilities with measuring arrangement of speed, voltage, current, temperature, frequency, Pf along with facilities of over speed test. The setup shall also consist of control desk, from which all the testing parameters can be controlled/monitored.
5. Manometer
6. Multi meter
7. Hand thermometer
8. Precision Multi meter
9. Computer or laptop for recording test data

LIST OF MEASURING INSTRUMENTS

1. Open Bridge type Co-ordinate measuring machine.
2. Micrometer
3. Bore micrometer
4. Bore dial Gauge.
5. Vernier Height Gauge
6. ~~Ultrasonic Thickness Gauge~~.
7. Straight edge /Surface table of minimum 2 meter X 1.5 meter for marking.
8. Infrared thermometer for checking temperature.
9. Megger
10. Micro Ohm meter
11. Oscilloscope.

Note :

(i) The M&P listed above is required to be complied by the firm. The alternate/additional M&P having better technology for manufacture of AC TM may also be acceptable.

(ii) Outsourcing of the process may be permissible subject to declaration of the process and outsourced firm's name in QAP. The credential of such outsourced firm should also be submitted. In such case, the M&P should be available at outsourced firm

(iii) For Sub-vendors: Sub vendors for procurement of raw material, parts and components outsourced by the firm shall be ISO certified. Sub vendor for critical items such as casting items of Stator & Rotor shall comply relevant standard for class –A foundry as per IS 12117: 2023 (Second Revision) or latest for casting components of TMs.

FINAL DRAFT CHANGES

(iv) * Mandatory for firms/sub-vendor having their own casting facility.

(v) Calibration of the testing / measuring equipment should be done at least once in a year, unless otherwise stated.

(vi) Details of Machinery & Plant, testing & measuring instruments are to be submitted as per format indicated at Annexure-A7 of ISO Document no.: QO-F-8.1-7 Version No.: 1.8 or latest.

****

FINAL DRAFT CHANGES