SPECIFICATION NO. ELRS/SPEC/BL/0003 (Rev. 1)

GOVERNMENT OF INDIA

MINISTRY OF RAILWAYS

(RAILWAY BOARD)

INDIAN RAILWAYS

TECHNICAL SPECIFICATION

AND

TEST PROGRAMME

FOR

CABLE HEAD TERMINATION SYSTEM

WITH VERTICAL RECEPTACLE

FOR 25 KV AC LOCOMOTIVES/EMUS

SPECIFICATION NO. ELRS/SPEC/BL/0003 (Rev. 1)
(PROVISIONAL)

DECEMBER, 2005

ISSUED BY

RESEARCH DESIGNS AND STANDARDS ORGANISATION

MANAK NAGAR, LUCKNOW-226 011

SPECIFICATION FOR CABLE HEAD TERMINATION SYSTEM

1.0 Introduction

1.1 RDSO issued specification No. EL/TP/E-13/5 Feb.'05 and EL/TP/E-13/6 Aug.96 for Cable Head Termination System with Elbow Connector for electric locos and EMUs respectively. In view of the problem of accessibility and maintenance at transformer end of this type of termination, RDSO in consultation with M/s BSES, Mumbai have developed a Cable Head Termination System with Vertical Take off arrangement. This system has the added advantages over the earlier system such as interchangeability with the conventional 25 KV Condenser Bushing, more working space and minimum mechanical stresses encountered due to vibrations and shocks in the rolling stock.

1.2 Assistance has been taken from the following for the preparation of this specification:

IEC-228-1978 :	Conductors for insulated cables.
IS- 7098 –1985:	Cross linked polyethylene insulated thermoplastic
IEEE Std.48-1975:	Test procedure & requirements for high voltage alternating current cable terminations.
IEC-840-1988:	Tests or Power cables with extruded insulation or rated voltage above 30 KV.
IEC-60077- (1999)	:Rules for electric traction.

1.3 Any deviation from this specification calculated to improve the performance, utility and efficiency of the equipment proposed by the manufacturer, will be given due consideration provided full particulars with justifications thereof are furnished in the tender.

2.0 SCOPE

2.1 This specification covers the supply of cable head termination system (suitable for carrying 450 Amps) comprising of Turret, Turret bushing, Straight Receptacle, XLPE cable, Outdoor termination, ET2 and other related accessories for installation on 25 KV single phase 50 Hz Locomotives & EMUs of Indian Railways.

3.0 SERVICE CONDITION

3.1 The cable head termination system arrangement shall be suitable for operation in ambient temperature varying from 0 deg C to 55 deg. C relative humidity ranging upto 100 percent at an altitude of 1000 meters above mean sea level and in dusty atmospheric conditions.

3.2 The equipment and its mounting arrangement shall be suitable for traction duty and shall withstand satisfactorily the vibrations and shocks normally encountered in service, as indicated below:-

a)	Max. vertical acceleration	=	1.0g
b)	Max. longitudinal acceleration	=	3.0g
c)	Max. transverse acceleration	=	0.5g
d)	Max. frequency 10 Hz with amplitude of (g being acceleration due to gravity)	=	2.5mm

3.3 In the direction corresponding to the longitudinal movement of the vehicle, the equipment is subjected for 2 minutes to 50 Hz vibrations of such a value that max. acceleration is equal to 3g (amplitude a = 0.3 mm)

3.4 The cable head termination system shall be suitable for continuous duty.

4.0 CONSTRUCTIONAL FEATURES

4.1 The general arrangement of cable head termination system shall be as per RDSO drawing No. SKEL-4529 for AC electric locomotives and SKEL-4526 for AC EMUs. The system will consist of items as per details given in clause 4.2 to 4.9 below:

4.2 TRANSFORMER TURRET

4.2.1 For electric locomotives a mild steel turret shall be manufactured as per RDSO drawing No. SKEL-4527. The mounting dimensions of turret shall be such that it can be directly mounted on the existing flange provided on the transformer tank cover.

4.2.2 For AC EMUs, the mild steel turret shall be manufactured as per RDSO drg. No- SKEL-4528 and shall have an explosion vent at the bottom with welded flange, cover plate and gasket which shall remain closed or dummied in case of transformers mounted with pressure release device or otherwise, the flange cover shall be removed to connect the explosions vent outlet provide in the EMU motor coach.

4.2.3 The turret shall be mounted with gasket, nuts, bolts and washers to prevent oil leakage.

4.2.4 The turret shall have sufficient strength to withstand loco/EMU vibrations, oil pressure and shall be supported firmly on the transformer body.

4.3 TRANSFORMER TURRET BUSHING

4.3.1 The epoxy moulded bushing of Elastimold type 650T1 (or the latest version available)/any other reputed make with equivalent technical features to the existing one shall be supplied with its flange welded on another stainless steel plate and mounted vertically on the turret as per RDSO drg. No. SKEL-4529 & 4526.The manufacturer shall adopt the following welding processes using heat sinks to ensure minimum heat flow to epoxy bushing:

(i) Inert gas, tungsten - arc welding (TIG).
(ii) Short arc welding (metal inert gas, MIG).

4.3.2 In case of locomotive transformer, a paper based insulating block with a flange at one end conforming to RDSO Drg. SKEL-4311 (Rev.1) shall be inserted inside A33 bushing flange provided at the transformer tank cover. This will prevent the A33 bushing lead to come in contact with the transformer tank and also improve the creepage path.

4.4 VERTICLE STRAIGHT RECEPTACLE WITH CABLE ADAPTOR

4.4.1 Straight receptacle of 35 KV class of Elastimold make type M655 SR (or the latest version available)/any other reputed make with equivalent technical features to the existing one shall be assembled on the cable for the transformer end bushing as per manufacturer's recommendation. The manufacturers shall supply the straight receptacle, cable adaptor and cable termination duly mounted on cable.

4.5 XLPE CABLE

4.5.1 120 mm^2, 45 KV XLPE cable with stranded copper conductor conforming to class 2 of IEC-228, 1978 constructed in accordance with IS: 7098 Part II, 1985 and meeting the dimensional requirement and test parameters as given in Annexure-I.

4.5.2 Approx. the length of the cable in 25KV AC tap changer locomotives shall be 2.5 m with tolerance of ± 0.15 m.

4.5.3 Approx. the length of the cable in 25KV AC EMU shall be 3.3 m with tolerance of ± 0.15 m.

NOTE: The maximum current requirement through XLPE cable in 25 KV AC EMU is around 50 Amps. Only for one motor coach for which 70 mm^2 cable would have been adequate but as the performance of 120 mm^2 cable already in use for similar termination for locomotive transformer has been satisfactory, 120 mm^2 cable has also been adopted for EMU application. Besides the use of 120 mm^2 cable for both EMU and loco applications has the following additional advantages:

i) No change in inventory/accessories.
ii) No repeat type test is required within five years.
iii) Inter-changeability of spares with loco termination.
iv) Short circuit fault clearance level is high (around 17.0 KA).
v) Due to low current density, life expectancy is more as compared to loco termination.

4.6 TERMINATION ON ROOF

4.6.1 Outdoor type 35 MTG roof termination arrangement with one premoulded stress control device in conjunction with 14 number of skirts/or any other make of proven design shall be used over the XLPE insulation to provide adequate creepage distance. The termination shall be of class I type of IEEE-48 (latest version).

4.6.2 The roof termination shall have a suitable size of copper lug to be crimped to 120 mm^2 copper conductor and provided with earth stress cones, leakage current collector and water sealing arrangement. The sealing of termination shall be by self-bonding tape and silicon tape. (Refer Annexure II for brief specification).

4.6.3 The XLPE cable shall pass through SS Pipe welded on 4 mm thick SS plate and the cable entry shall be sealed with self bonding tape to prevent water leakage.

4.7 EARTHING OF THE CABLE

4.7.1 The metallic tape and wire screen of the XLPE cable is required to be earthed at both ends. However, it has been observed that due to induced voltage in the screen, a reverse current flows in it which is likely to adversely effect the setting of the QLM relay. It is, therefore, considered necessary to earth the screen as under:

- In locomotives, the CT shall be lowered by about 20mm with the provision of spacers in the mounting bolt and the crimped end of a 50 sq. mm, 750 V grade elastomeric cable (approx. 4.5 m length) to be connected to the earth screen at the vertical receptacle end. This cable is to be threaded back through the CT and terminated on the locomotives ceiling. The screen of XLPE at the end shall be terminated on the locomotive roof.

- Similarly for ac EMUs, the same earthing arrangement shall be adapted. However, there is no need to lower the CT as adequate space between the CT and ceiling is available.

4.8 SUPPORTS

4.8.1 The straight receptacle shall be supported as shown in the RDSO drawing No. SKEL-4529 & SKEL- 4526.

4.8.2 A clamping arrangement (item 16) for the cable on the roof top shall also be provided as shown in the RDSO drawing No.SKEL-4529 & 4526. The clamps shall be embedded with the rubber pads (item 21) to avoid any damage to the cable insulation.

4.9 ET2 SPARK GAP

4.9.1 For ac electric locomotives Spark Gap (ET2) shall be provided as per RDSO drg.. No. SKEL-4529 across the earthing switch insulator. The construction of ET-2 shall be conformed to RDSO Drawing No. SKEL-4335.

4.9.2 For ac EMUs, Spark Gap (ET2) shall be provided as per RDSO drg. No. SKEL-4526 across the high voltage insulator and its construction shall conform to RDSO Drawing No. SKEL-4384.

5.0 TEST ON COMPLETE CABLE HEAD TERMINATION ARRANGEMENT

5.1 TYPE TESTS

The following type tests shall be carried out once in five years in the presence of authorized representative of Railways/Production Units/RDSO. The type tests once conducted on the complete unit supplied by a particular manufacturer need not be repeated within a period of five years. Type tests may be repeated in between this period, if any change in the manufacturing process, construction, material, design of Cable Head Termination or its accessories is introduced.

5.1.1 Dry power frequency withstand voltage test at 75 KV (RMS) as per IS:2099-1986, IEC-137-1984.

5.1.2 Wet power frequency withstand voltage test at 75 KV (RMS) as per IS:2099-1986, IEC-137-1984.

5.1.3 Impulse voltage test at 175 KV peak, as per IS:2099-1986.

5.1.4 Partial discharge test. (Provisional)

As per OEM's i.e. Elastimold, USA and Euromold, Belgium the individual component of cable head termination assembly (receptacle, bushing etc) are 100% tested for partial discharge and HV power frequency tests. PD test on CHT shall be carried out as per table '1' of IEEE-48 (latest version) with 34.5 KV insulation class at 30 KV extinction voltage with 3 PC apparatus sensitivity. In absence/unavailability of any reference for capacitance graded cable terminations, PD test values are tentative and the final values will be decided after applying the test on CHT system of different vendors.

5.1.5 Additional tests: (Provisional)

The following additional tests are to be carried out as per IS:13573-1992 on complete cable head termination system. These tests are provisional and the final values will be decided after applying the tests finalized on the CHT system of different vendors.

i) Load cycle test with voltage in air 3 cycles at 45 KV (each ccle 5 hours heating at 3 hours cooling).
ii) Load cycle test with voltage in air, 9 cycles at 45 KV [each cycle 5 hours heating (100 deg C) and 3 hours cooling].
iii) Load cycle test with no voltage in water, 9 cycles [each cycle 5 hours heating (100 deg C) and 3 hours cooling].
iv) Partial discharge test at 45 KV after 'load cycle test'.
v) Conductor resistance test after 'load cycle test'.
vi) Impulse voltage withstand test at 175 KV peak after 'load cycle test'.
vii) Influence of humidity.

5.1.6 The type test certificate approved by RDSO shall be valid for a period of five years.

5.2 **ROUTINE TESTS**

5.2.1. The supplier shall furnish Acceptance Test Certificate on XLPE cable as given in Annexure I.

5.2.2 The turret duly mounted with 650 T1/or equivalent technical features bushing shall be tested for a pressure of 14 p.s.i. for a period of one hour to ensure that it is leak proof.

5.2.3 The cable termination shall successfully withstand dry power frequency voltage of 60 KV rms for one minute. This test shall be carried out by the supplier at their works on 100% terminations before supplying to Railways/ Transformer manufacturers. However, Transformer Manufacturers shall also test cable termination along with the transformer with dry power frequency voltage of 60 KV (RMS) for one minute.

ANNEXURE I

GUIDELINES FOR MANUFACTURE AND TESTING OF 120 SQ.MM. 45 KV CLASS XLPE COPPER CABLE

(A) CONSTRUCTION		REQUIREMENTS
1. Stranded circular compacted copper conductor	:	IEC:228-Class 2 - 1978
2. Dia over conductor (18 wires min.)	:	13.2 mm (Approx.)
3. Thickness of Semi Conductor screen	:	0.8 mm (Approx.)
4. Thickness of XLPE Insulation	:	9.5 mm (Nominal)
5. Dia over insulation	:	33.3mm (Nominal) It shall not be less than 0.2mm below nominal value
6. Thickness of semi conducting screen over insulation	:	1.10 mm (Min.)
7. Bedding with water swellable tape	:	1.60 mm (Min.)
8. Copper wire	:	36mm x 1.2 mm(Nominal)
9. Copper tape to give 25 sq.mm	:	30mm x 0.2 mm(Nominal)
10. PVC sheathing	:	2.80mm (Nominal)
11. Overall dia	:	50.00 mm (Max.)
12. Approx. weight per meter	:	3.2 kg.

The tolerance on dimension wherever not specified shall be governed by IS-7098 Pt.II,1985 as applicable for its highest class of voltage.

(B) TESTS

The following tests to be carried out on XLPE cable in accordance with relevant para of IEC-60840-(latest) are as under:

1.0 ACCEPTANCE TESTS :

The following tests to be carried out on samples from a lot for the purpose of acceptance of the lot. The acceptance test once conducted on a ordered lot of the cable shall not be repeated, if the cable is used in the termination is from the same inspected lot. The Railways in this case shall only make sure that the cable drum has been inspected earlier by some representative of Railways/Production Units/RITES. The supplier of the cable head termination arrangement shall, however, ensure that the identification mark of the test on the drums is preserved by them and they will produce a copy of the acceptance test certificate as and when asked for by the users.

1.1 Conductor examination including resistance measurement.
1.2 Measurement of thickness of insulation and sheath.
1.3 Measurement of diameters.
1.4 Test on Insulation :
1.4.1 Hot set test for XLPE
1.4.2 Tensile strength and elongation.
1.5 Test on PVC sheath at low temperature.
1.5.1 Loss of mass test on PVC.
1.5.2 Pressure test at high temperature on sheath.
1.5.3 Heat shock test for PVC sheath.
1.6 Resistivity of semi conducting layers.
1.7 Measurement of capacitance.
1.8 Flammability test.

2.0 TYPE TESTS:

These tests to be carried out to prove conformity with the requirements of specification and general quality/design features of the cable. The test results shall be valid for a max. period of five years. Type tests may also be repeated within this five years period, if any change is introduced in the cable material or design.

2.1 Bending test followed by partial discharge test.
2.2 Tan delta measurement.
2.3 Heating cycle test followed by partial discharge test.
2.4 Impulse withstand test followed by power frequency withstand voltage test.
2.5 Mechanical properties of insulation and sheath before and after ageing test.
2.6 Shrinkage test for XLPLE insulation.

3.0 ROUTINE TEST

These tests shall be carried out by manufacturers on all finished cable length to ensure consistency of the product. However, the purchaser may carry out these tests on samples sealed at random as per the relevant specification to verify the results observed by the manufacturers.

3.1 Conductor Resistance Test

3.2 Partial discharge test.

3.3 AC Voltage test.

ANNEXURE II

(A) SELF BONDING TAPE

The self bonding tape shall be of Okoprene-Neoprene rubber or its equivalent having operating temperature not less than 130 deg. Centigrade. The length of tape shall be approx. 9 mts. and width 38/50 mm. The dielectric strength of the taps shall not be less than 5 KV/mm. The elongation during stretching shall not be less than 40%. The tape shall be suitable for outdoor use and shall not be affected by heat, water and other air contamination. The application of the tape shall make the sealing of cable end waterproof.

(B) SILICON TAPE

The silicon tape shall have class H insulation made up of silicon rubber. The colour of the tape shall be gray. The length and width shall be approx. 9 meters and 19/38 mm respectively. The silicon tape shall have anti tracking property. The tape shall withstand 2.5 KV, with resistance of 10 K ohms and current of 0.25 Amps. for 1000 min. No tracking should occur.

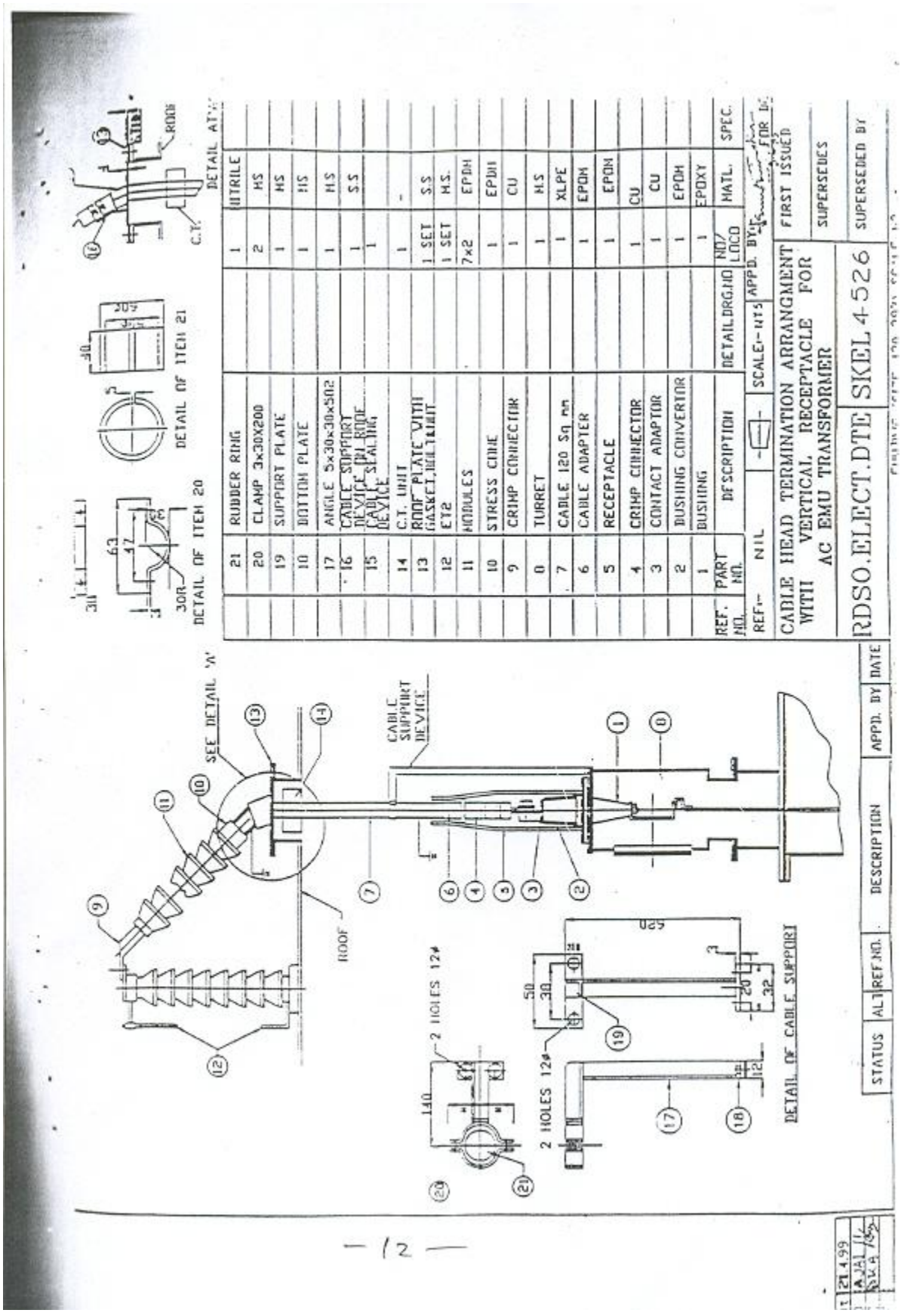
RDSO.ELECT.DTE SKEL 4526
CABLE HEAD TERMINATION ARRANGMENT WITH VERTICAL RECEPTACLE FOR AC EMU TRANSFORMER
FIRST ISSUED
SUPERSEDES
SUPERSEDED BY
DETAIL OF CABLE SUPPORT
DETAIL OF ITEM 20
DETAIL OF ITEM 21
SEE DETAIL 'A'
CABLE SUPPORT DEVICE
ROOF
2 HOLES 12ø
RUBBER RING
CLAMP 3x30X200
SUPPORT PLATE
BOTTOM PLATE
ANGLE 5x30x30x502
CABLE SUPPORT DEVICE ON ROOF
CABLE SEALING DEVICE
C.T. UNIT
ROOF PLATE WITH GASKET,BOLT&NUT
ET2
MANHOLES
STRESS CONE
CRIMP CONNECTOR
TURRET
CABLE 120 Sq mm
CABLE ADAPTER
RECEPTACLE
CRIMP CONNECTOR
CONTACT ADAPTOR
BUSHING CONVERTOR
BUSHING
DESCRIPTION
DETAILDRGNO
NO/LOCO
MATL.
SPEC.
NITRILE
HS
HS
HS
HS
SS
EPDM
EPDM
CU
HS
XLPE
EPDM
EPDM
CU
CU
EPDM
EPOXY
STATUS
DESCRIPTION
APPD. BY
DATE

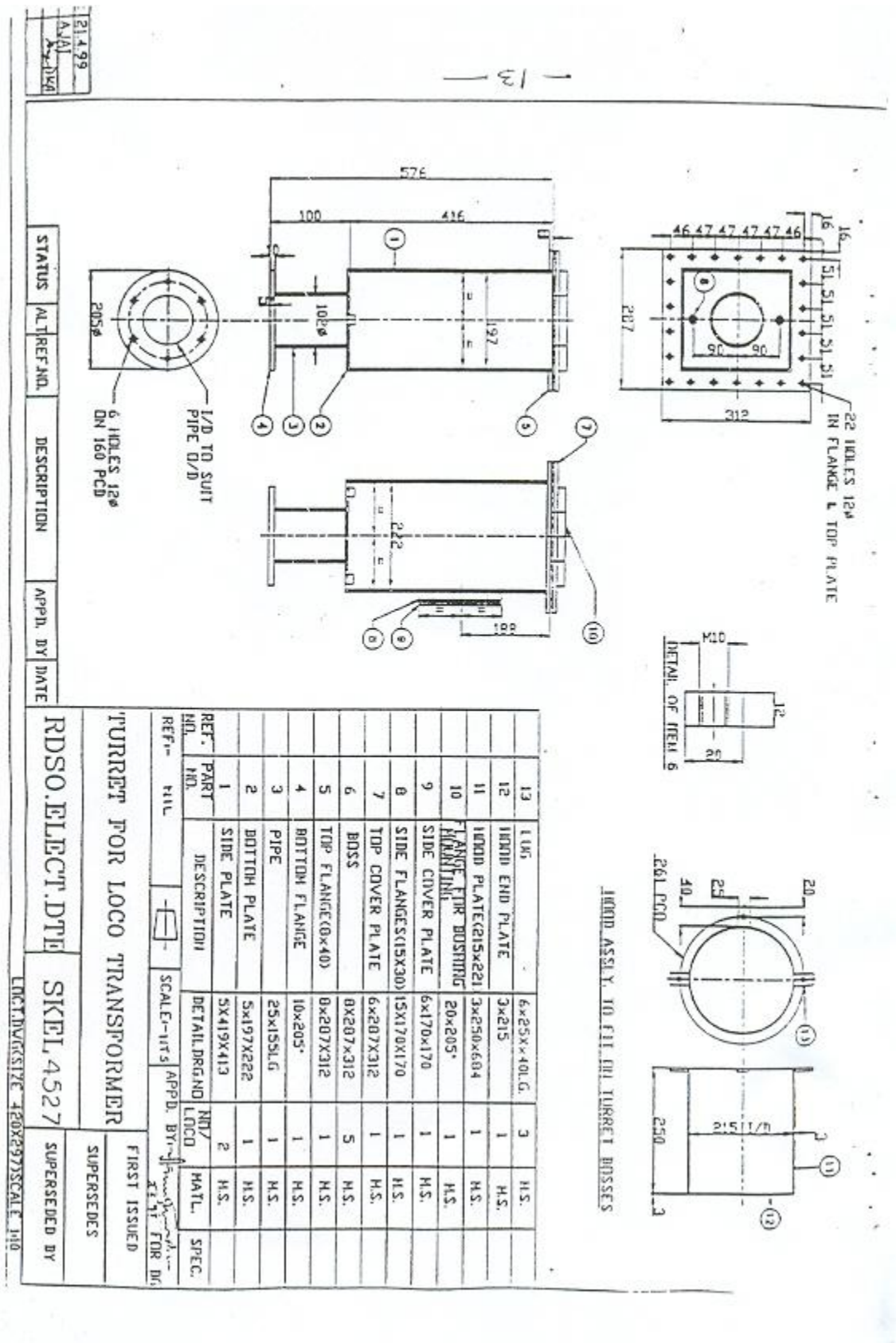

REF. NO.	PART NO.	DESCRIPTION	DETAIL DRG NO	NO/ LOCO	MATL.	SPEC.
		REF:- NIL				
13		LUG	6x25x40LG	3	M.S.	
12		HOOD END PLATE	3x215	1	M.S.	
11		HOOD PLATE(215x221 FLANGE FOR BUSHING MOUNTING	3x250x604	1	M.S.	
10		SIDE COVER PLATE	20x205*	1	M.S.	
9		SIDE COVER PLATE	6x170x170	1	M.S.	
8		SIDE FLANGES(15X30)	15X170X170	1	M.S.	
7		TOP COVER PLATE	6x207X312	1	M.S.	
6		BOSS	8X207X312	5	M.S.	
5		TOP FLANGE(8x40)	8x207X312	1	M.S.	
4		BOTTOM FLANGE	10x205*	1	M.S.	
3		PIPE	25x155LG	1	M.S.	
2		BOTTOM PLATE	5x197X222	1	M.S.	
1		SIDE PLATE	5X419X413	2	M.S.	

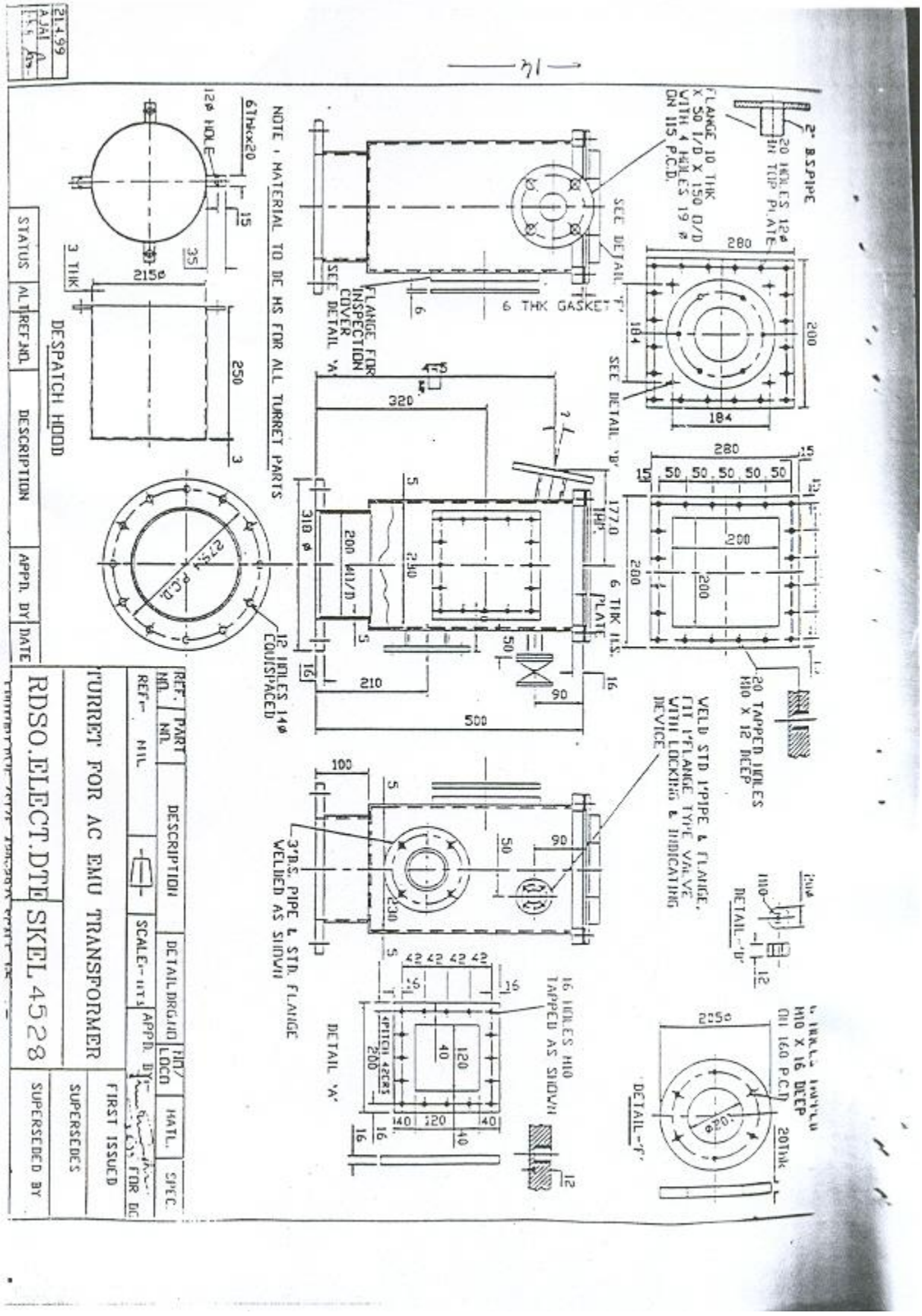
RDSO.ELECT.DTE SKEL 4528
TURRET FOR AC EMU TRANSFORMER
DESPATCH HOOD
NOTE : MATERIAL TO BE HS FOR ALL TURRET PARTS
FIRST ISSUED
SUPERSEDES
SUPERSEDED BY
DETAIL 'A'
DETAIL 'B'
DETAIL 'C'
DETAIL 'D'
DETAIL 'E'
DETAIL 'F'
SEE DETAIL 'A'
SEE DETAIL 'B'
SEE DETAIL 'C'
SEE DETAIL 'D'
SEE DETAIL 'E'
SEE DETAIL 'F'
6 THK GASKET
6 THK FLANGE
6 THK PLATE
FLANGE FOR INSPECTION COVER
2" B.S.PIPE
12 HOLES 12ø EQUISPACED
16 HOLES M10 TAPPED AS SHOWN
20 TAPPED HOLES M10 X 12 DEEP
12ø HOLE
3 THK
STATUS
DESCRIPTION
APPRD. BY
DATE

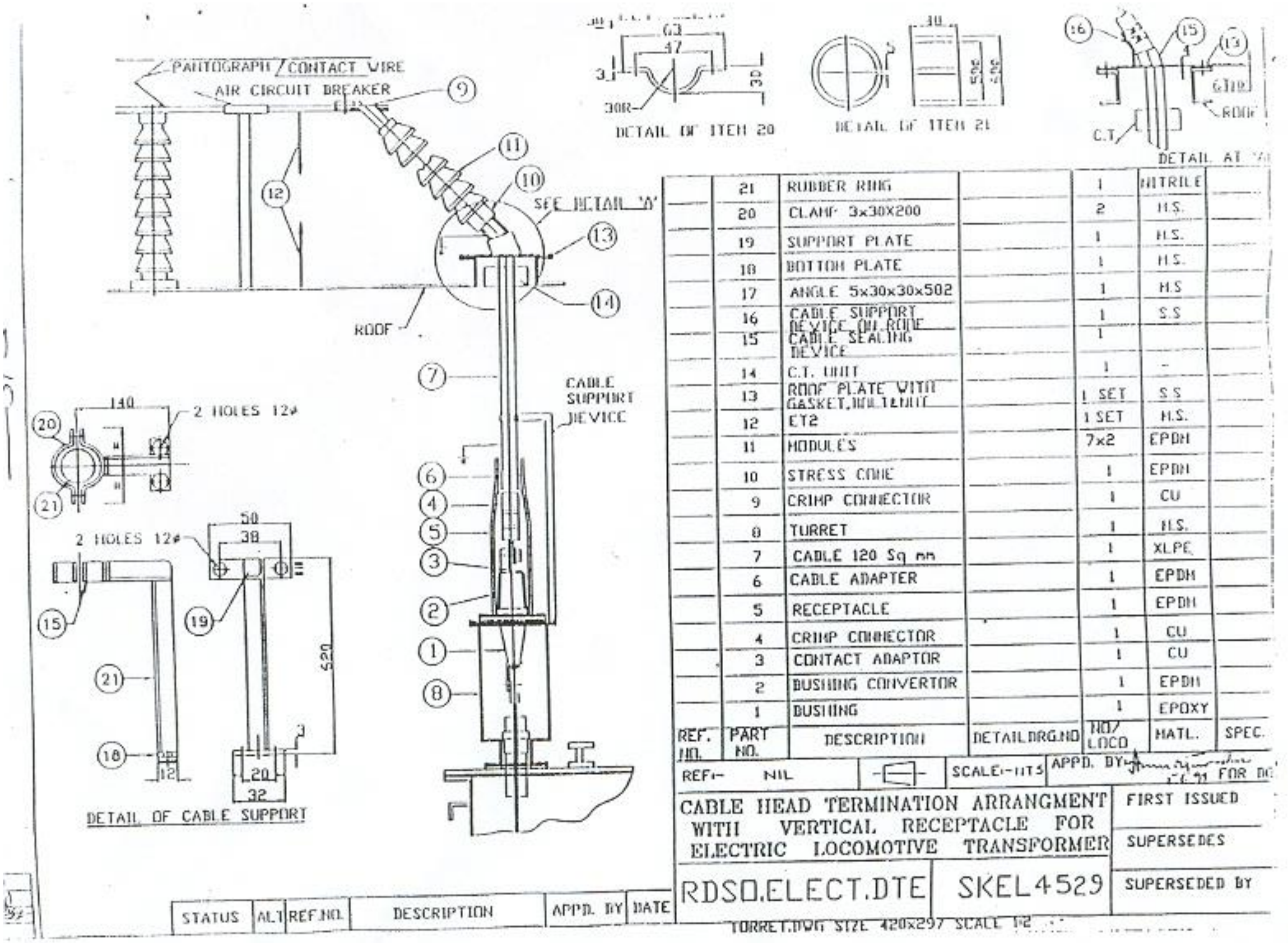

REF. NO.	PART NO.	DESCRIPTION	DETAIL DRG.NO	NO/LOCO	MATL.	SPEC.
	21	RUBBER RING		1	NITRILE	
	20	CLAMP 3x30X200		2	M.S.	
	19	SUPPORT PLATE		1	M.S.	
	18	BOTTOM PLATE		1	M.S.	
	17	ANGLE 5x30x30x502		1	M.S	
	16	CABLE SUPPORT DEVICE ON ROOF		1	S.S	
	15	CABLE SEALING DEVICE		1		
	14	C.T. UNIT		1	-	
	13	ROOF PLATE WITH GASKET,NUT&NUT		1 SET	S.S	
	12	ET2		1 SET	M.S.	
	11	MODULES		7x2	EPDM	
	10	STRESS CONE		1	EPDM	
	9	CRIMP CONNECTOR		1	CU	
	8	TURRET		1	M.S.	
	7	CABLE 120 Sq mm		1	XLPE	
	6	CABLE ADAPTER		1	EPDM	
	5	RECEPTACLE		1	EPDM	
	4	CRIMP CONNECTOR		1	CU	
	3	CONTACT ADAPTOR		1	CU	
	2	BUSHING CONVERTOR		1	EPDM	
	1	BUSHING		1	EPOXY	

REF:- NIL

SCALE:- NTS

APPD. BY ... FOR DG

CABLE HEAD TERMINATION ARRANGMENT WITH VERTICAL RECEPTACLE FOR ELECTRIC LOCOMOTIVE TRANSFORMER

RDSO.ELECT.DTE

SKEL4529

FIRST ISSUED

SUPERSEDES

SUPERSEDED BY

STATUS	ALT	REF.NO.	DESCRIPTION	APPD. BY	DATE

TURRET.DWG SIZE 420x297 SCALE 1:2

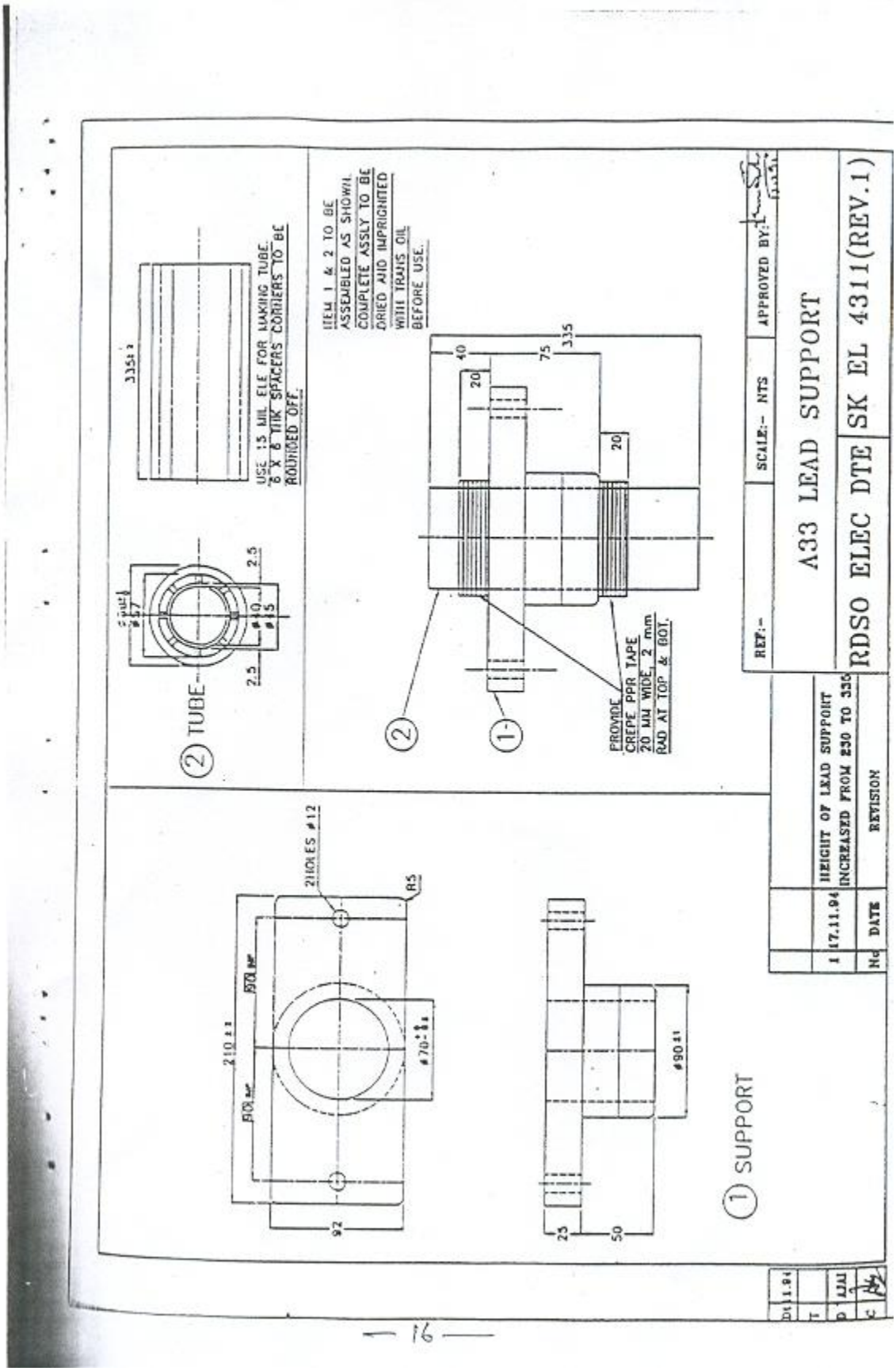
A33 LEAD SUPPORT
RDSO ELEC DTE
SK EL 4311(REV.1)
SCALE:- NTS
APPROVED BY:
REF:-
HEIGHT OF LEAD SUPPORT INCREASED FROM 250 TO 335
17.11.94
DATE
REVISION
ITEM 1 & 2 TO BE ASSEMBLED AS SHOWN. COMPLETE ASSLY TO BE DRIED AND IMPRIGNATED WITH TRANS OIL BEFORE USE.
USE 1.5 MM ELE FOR MAKING TUBE. 6 X 6 MM SPACERS CORNERS TO BE ROUNDED OFF.
PROVIDE CREPE PPR TAPE 20 MM WIDE, 2 mm RAD AT TOP & BOT.
2 HOLES ø12
R5
2 TUBE
1 SUPPORT

RDSO ELEC DTE SK EL 4384
ARCING HORN ET- 2 FOR 25 KV AC EMU
REF:-
SCALE:- NTS
APPROVED:-
ET2 BOTTOM
MATL. : STEEL GALVANISED
M8 SCREW 50 LG.
WITH PLAIN WASHERS
& 2 LOCK NUTS
(STEEL CADMIUM PLATED)
CU. EARTH STRIP
AT EVEN ROOF TOP
HOLE 12ø
ET2 TOP
MATL. : STEEL GALVANISED
M8 SCREW 50 LG.
WITH PLAIN WASHERS
& 2 LOCK NUTS
(STEEL CADMIUM PLATED)
HOLE 12ø
HOLE 18ø
AJAI
— 17 —

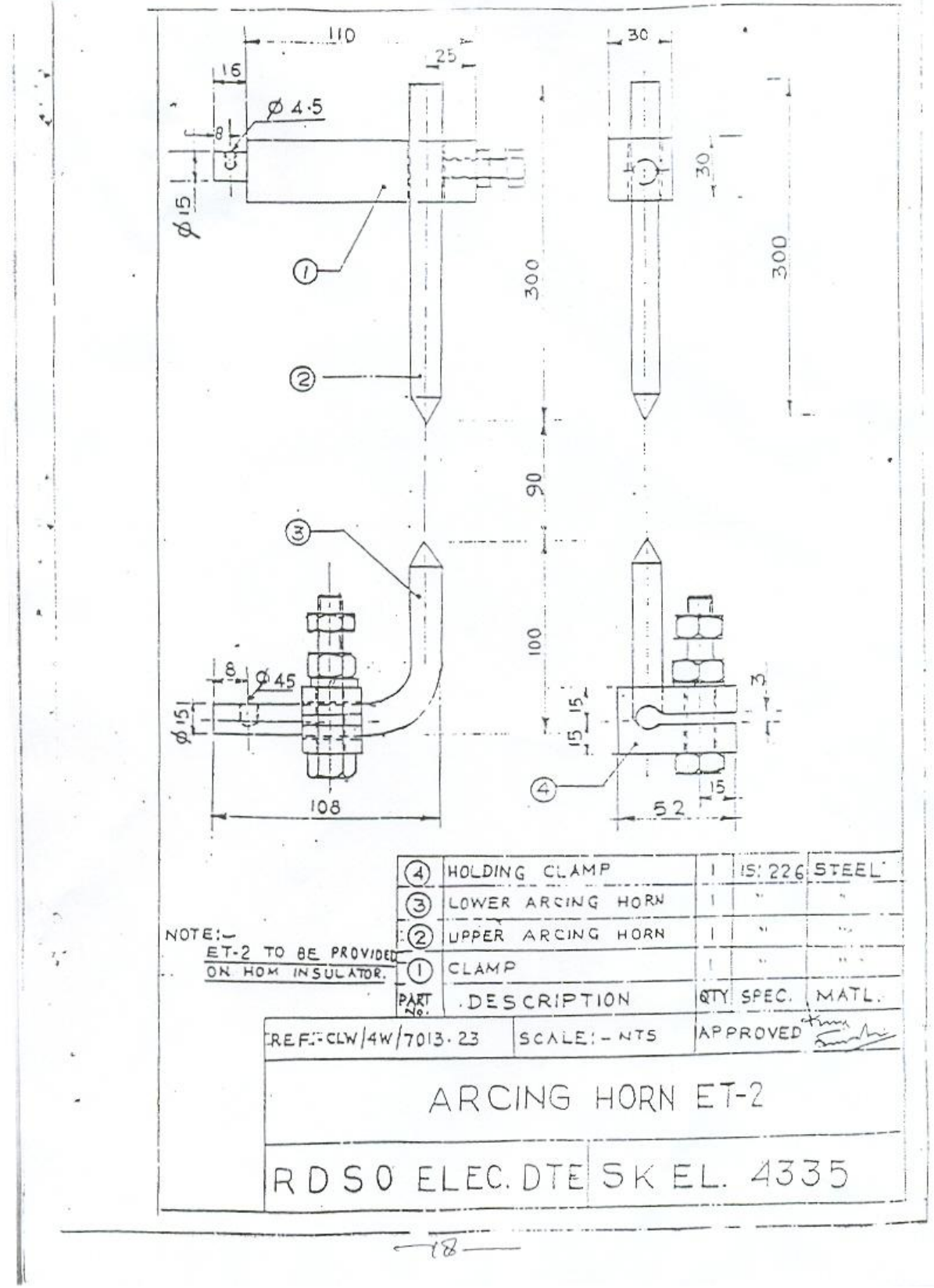
110
25
16
Ø 4·5
8
C.L.
Ø 15
30
30
300
300
90
100
Ø 45
8
Ø 15
108
15
15
3
52
15
NOTE:-
ET-2 TO BE PROVIDED ON HOM INSULATOR.
4 HOLDING CLAMP 1 IS: 226 STEEL
3 LOWER ARCING HORN 1 " "
2 UPPER ARCING HORN 1 " "
1 CLAMP 1 " "
PART No. DESCRIPTION QTY SPEC. MATL.
REF:- CLW/4W/7013·23
SCALE:- NTS
APPROVED
ARCING HORN ET-2
RDSO ELEC. DTE SK EL. 4335

AMENDMENT NO. 1 OF Dec. 2008

TO

RDSO SPECIFICATION NO. ELRS/SPEC/BL/0003 (REV.1), DECEMBER 2005 FOR CABLE HEAD TERMINATION SYSTEM WITH VERTICAL RECEPTACLE FOR 25 KV AC LOCOMOTIVES / EMUs

1.0 Clause 4.2.2 :-To be read as under:

For AC EMU/MEMUs, the turret provided on the transformer is an integral part of transformer provided by transformer manufacturer and is suitable for fitment of vertical take-off type CHT assemblies. Procurement of CHT for EMU/MEMUs application by PUs/Zonal Railways will be without turret as being done presently.

Further, in view of the development of fresh sources of supply of CHT wherein it is necessary to modify the existing turret, the transformer manufacturers have already been advised to cut-in modified turret to suit fitment of CHTs supplied by different vendors. Railways / PUs shall continue to procure CHTs for EMU / MEMUs application without turret. However, for those CHT vendors whose termination needs the modified turret, the same will be required to be supplied by them along with CHT without any additional cost on Railways.

2.0 Clause 5.1.5 (i): To be read as under:

Load cycle test with voltage in air 3 cycles at 45 KV [each cycle 5 hours heating (100 deg. C) and 3 hours cooling].

3.0 Clause 5.1.5 (vi): To be read as under:

Impulse voltage withstand test at 175 KVp after 'load cycle test'.

****