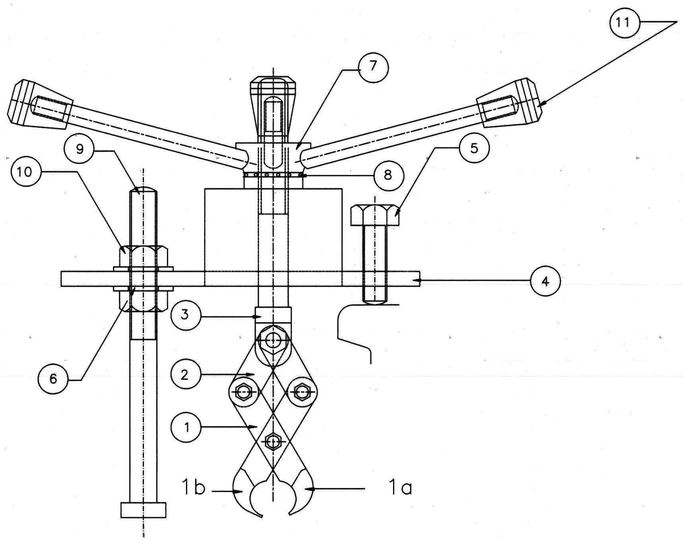

ELEVATION

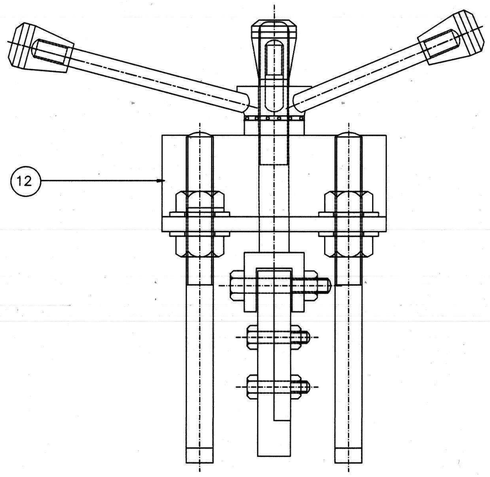

SIDE VIEW

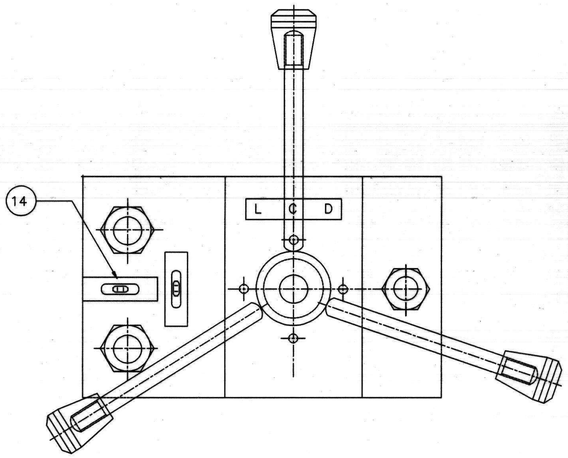

PLAN

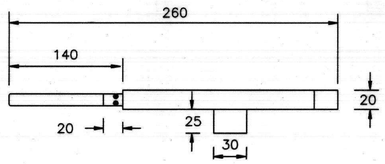

(13) SPRING LOADED GAP SENSOR

S.NO.	DESCRIPTION	SPECIFICATION	NO.OFF.
14.	SPIRIT LEVEL	IS:1632–1993	2
13.	GAP SENSOR	–	1
12.	LOAD INDICATOR WITH LOAD CELL	–	1
11.	SUITABLE UNBREAKABLE PLASTIC/BAKELITE GRIP	IS:5210–1995	3
10.	NUT	IS:1363Pt.B–1992	4
9.	LEGS	IS:432Pt1–1982	2
8.	SUITABLE THRUST BEARING (COVERED)	STANDARD NO.51104(RIAT) OR EQUIVALENT	1
7.	ROTATION HANDLE	CL.–4 STEEL IS:1875–92.	1
6.	M.S. WASHER	IS:5370–1969(REV.1996)	4
5.	LEVELLING LEG	IS:1363Pt1–1991	1
4.	BASE PLATE	IS:2062–1992	1
3.	LINK HANGER	CL.–4 STEEL IS:1875–92.	1
2.	STEEL LINK	SILICO MANGANESE SPRING STEEL TO GR.55 OF IS: 3195–1992	2
1.	TONG	SPRING STEEL GR.50 CL.–4 V2 TO IS:3195–92 SUITABLY HEAT TREATED	2

R. D. S. O.

ELECTRONIC TOE LOAD MEASURING DEVICE (ASSEMBLY)

CANCLD./SUPED.
REVED.

DRG. NO. TM/9909

SHEET NO.1 OF 2 SHEETS.

N O T E S

6. LCD SHOULD BE EIGTHER PERPENDICULAR OR PARALLEL TO THE RAIL.
5. LOAD CELL PREFERABLY MAY BE KEPT AT THE CENTRE OF THE LOAD INDICATOR.
4. MINOR VARIATION IN THE DIMENSIONS OF THE GAP SENSOR ARE ACCEPTABLE. THE GRIPING HANDLE MAY BE OF ANY SHAPE OR DESIGN. BUT IT SHOULD BE HANDY AND SUITABLE FOR APPLICATION. GAP SENSOR SHOULD BE PROVIDED WITH MICRO SWITCHES.
3. LINK HANGER AND ROTATION HANDLE: HEAT TREATMENT, OIL – HARDENING AND TEMPERING AT SUITABLE TEMPERATURE. AFTER HEAT TREATMENT: THE HARDNESS SHALL BE 210 TO 240 HB.
2 INDICATES WELDING.
1 ALL DIMENSIONS ARE IN MILLIMETRES.

SPECIFICATION	SCALE	ALT.	DESCRIPTION	AUTHY.
	NOT TO SCALE	2	(i) NOTE No. 6 ADDED (ii) ALTERATION IN GAP SENSOR DIMENSIONS & REV. OF SPECIFICATION	S.K. SINGH ARE/TM/SM
		1	SPECIFICATION & DETAILS OF SPRIT LEVEL ADDED.	Sd/– M.C.Chotterjee ARE/TM/TL

DR.BY: O.P.KAPOOR	PLT.BY: O.P.KAPOOR	APPROVED BY:
CH.BY: A.K.CHKERABORTY	COM.BY: A.RAI	ARE/TM/SM