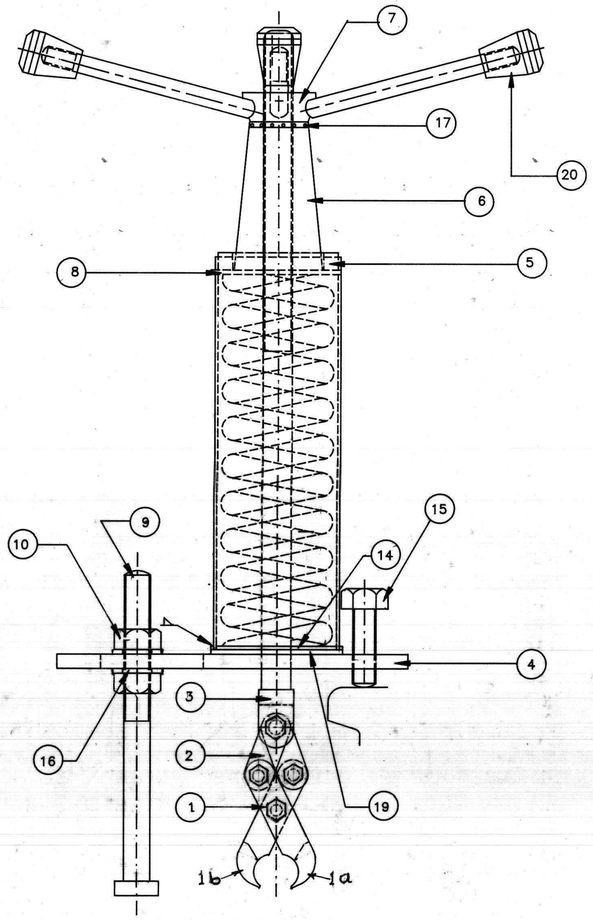

ELEVATION

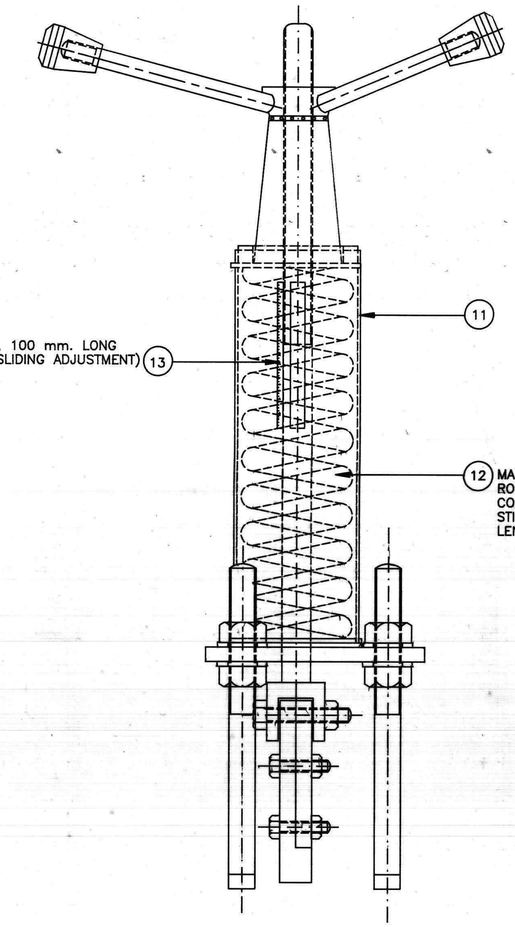

SIDE VIEW

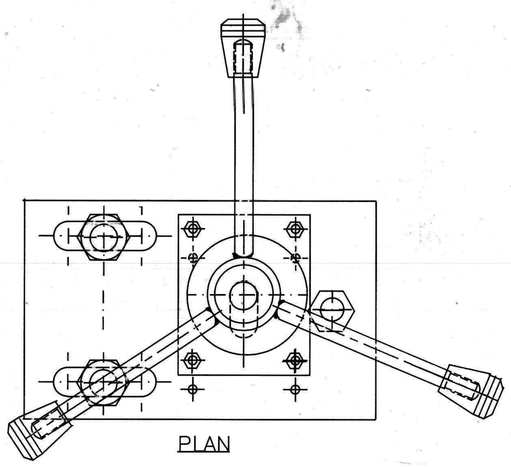

PLAN

5. HEXAGONAL SPARE NUT TO SUIT THE SQUARE THREAD OF LINK HANGER ③ TO BE USED DURING BOXING AFTER REMOVEL OF ROTATION HANDLE ⑦ .

4. LINK HANGER AND ROTATION HANDLE: HEAT TREATMENT, OIL –HARDENING AND TEMPERING AT SUITABLE TEMPERATURE. AFTER HEAT TREATMENT, THE HARDNESS SHALL BE 210 TO 240 HB.

3. MAXIMUM LIMITS OF FREE HEIGHT AND OUTER–DIA. OF MAIN SPRING NOT TO EXCEED 260 mm. AND 75 mm. RESPECTIVELY LIMIT OF MEASURING CAPACITY 1400 kg.+50kg. – 0kg.

2 INDICATES WELDING.

1 ALL DIMENSIONS ARE IN MILLIMETRES.

S.NO.	DESCRIPTION	SPECIFICATION	NO.OFF.
20.	SUITABLE UNBREAKABLE PLASTIC/BAKELITE GRIP	–	3
19.	ANCILLARY BASE PLATE OF SPRING BOX.	IS:226	1
18.	KEY FOR ADJUSTMENT OF SPRING COMPRESSOR	–DO–	1
17.	SUITABLE THRUST BEARING (COVERED)	STANDARD NO.51104(RAIT) OR EQUIVALANT	1
16.	M.S. WASHER	IS:226	4
15.	LEVELLING LEG	–DO–	1
14.	BASE PLATE OF SPRING BOX	–DO–	1
13.	STEEL/BRASS SCALE	GRADUATED SCALE 100mm LONG(LC=1 mm.)	1
12.	MAIN SPRING (COMPRESSION TYPE)	HELICAL SPRING;SILICO MANGANESE SPRING STEEL TO GR.55 Si 7, IS:3195–92 COMPRESSION 16kg. TO 20kg. PER mm.	1
11.	SPRING BOX	IS: 226	1
10.	NUT	–DO–	4
9.	LEGS	–DO–	2
8.	INDICATOR PLATE	–DO–	1
7.	ROTATION HANDLE	CL.–4 STEEL IS:1875–92.	1
6.	COMPRESSION BLOCK	IS: 226	1
5.	SPRING COMPRESSOR	–DO–	1
4.	BASE PLATE	–DO–	1
3.	LINK HANGER	CL.–4 STEEL IS:1875–92.	1
2.	STEEL LINK	SILICO MANGANESE SPRING STEEL TO GR.55 Si7, IS:3195–92	2
1. a b	TONG	SPRING STEEL GR.50 Cr.–4 V2 TO IS:3195–92 SUITABLY HEAT TREATED	2

R. D. S. O.

TOE LOAD MEASURING DEVICE (ASSEMBLY)

CANCLD./SUPED. TO DRG NO. TM/9501/1 (REV.)
REVED.

DRG.NO.TM/9528/1

SHEET NO.1 OF 2 SHEETS.

N O T E S	SPECIFICATION	NOT TO SCALE SCALE	ALT.	DESCRIPATION	AUTHY.

DR. BY: O.P. KAPOOR	PLT. BY: O.P. KAPOOR	APPROVED BY:
CH. BY: 23.11.95	COM. BY:	23.11.95