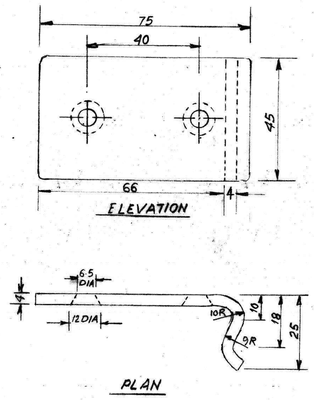

(4) DETAILS OF RAIL SEATING 'A'
(FIXED END)

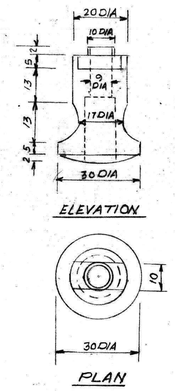

DETAILS OF GAUGE TIP 'B' (5A)

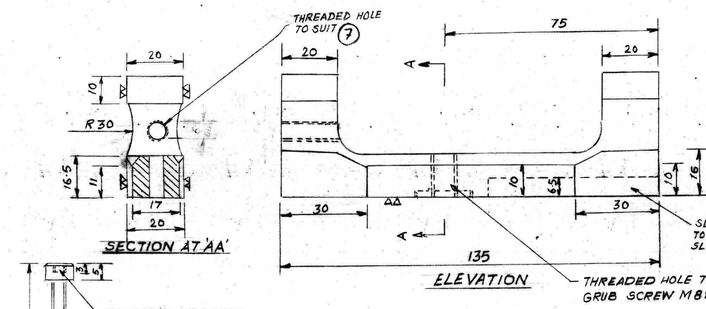

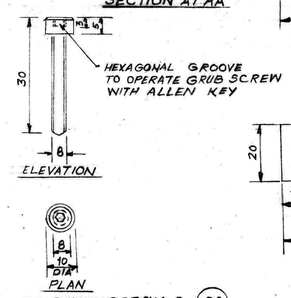

DETAILS OF GRUB SCREW B (6A)

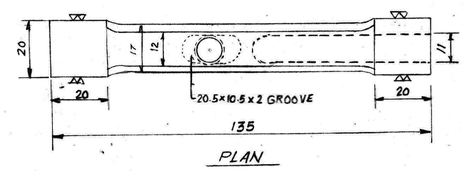

DETAILS OF GUIDE BRACKET (6)

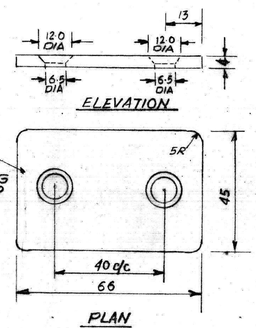

(5) DETAILS OF RAIL SEATING
(SLIDING END)

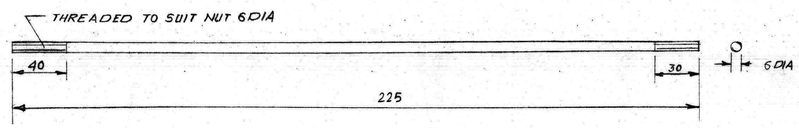

DETAILS OF CONNECTING ROD (7)

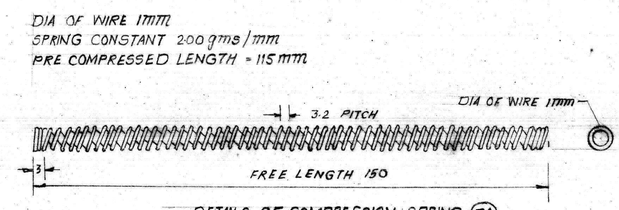

DETAILS OF COMPRESSION SPRING (7A)

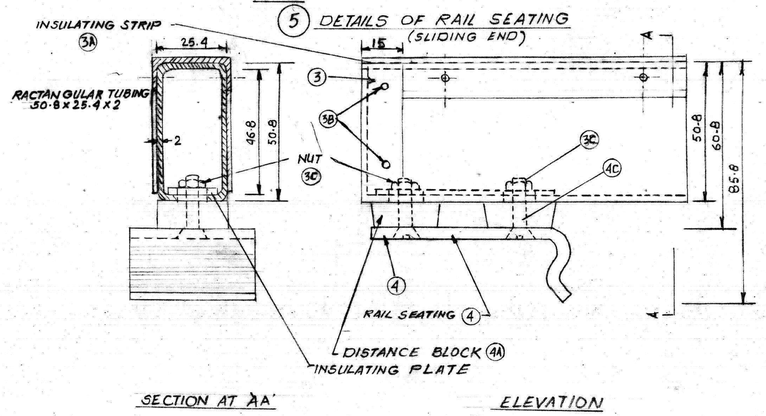

DETAILS OF FIXED END

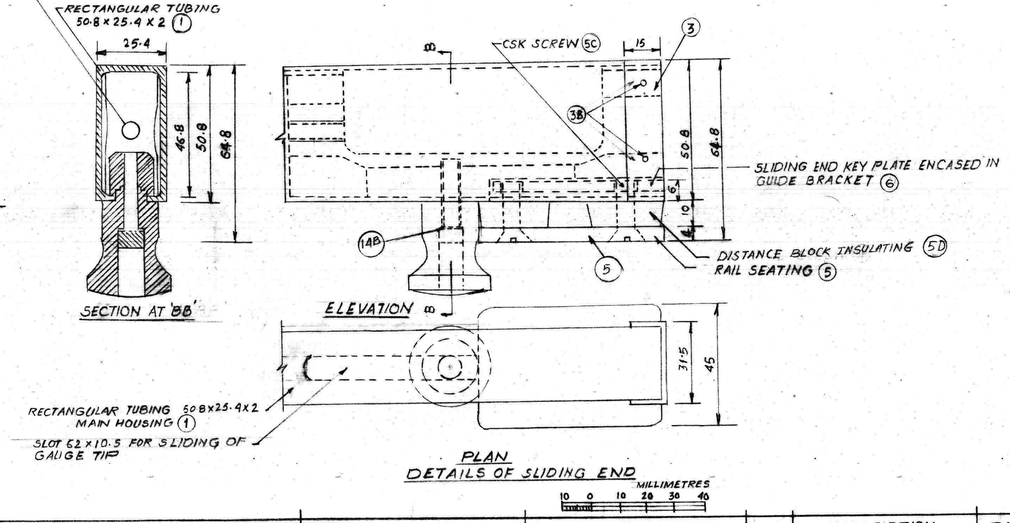

DETAILS OF SLIDING END

MILLIMETRES
10 0 10 20 30 40

2. THIS DRAWING SUPERSEDES PREVIOUS DRG. NO. TM/0101/1
1. ALL DIMENSIONS ARE IN mm.

NOTES	SPECIFICATION	SCALE	ALT	DESCRIPTION	DATE

THIS DRAWING IS THE PROPERTY OF
RESEARCH DESIGNS AND STANDARDS ORGANISATION
(MINISTRY OF RAILWAYS)
LUCKNOW - 226011 - INDIA
AND SHALL NOT BE USED, COPIED, REPRODUCED IN PART OR WHOLE WITHOUT PRIOR CONSENT IN WRITING

R. D. S. O.

BOX TYPE GAUGE CUM LEVEL (MG)

DETAILS OF SLIDING GUIDE BRACKET, RAIL SEATING, GAUGE TIPS, STUD, SPL. BOLT CONNECTING ROD & COMPRESSION SPRING

CANCLD/ SUPED REVED DRG. NO. TM/0101/1

DRG NO. TM/0109/1

DRAWN BY:-	TRACED BY:	APPROVED BY:-
CH. BY.-	COM. BY:-	ARE/TM 04/07/94 · KSK 04.7.94 DTM-IV

SHEET No 2 OF 3 SHEETS