2337166/2023/O/o PED/TI/RDSO

6075

सत्यमेव जयते

भारत सरकार GOVERNMENT OF INDIA

रेल मंत्रालय MINISTRY OF RAILWAYS

विशिष्टि संख्या: टीआई/एसपीसी/आरसीसी/स्काडा/0134
Specification No: TI/SPC/RCC/SCADA/0134

25kV और 2x25 kV सिंगल फेज 50Hz एसी ट्रैक्शन पावर सप्लाई के पर्यवेक्षी नियंत्रण और डेटा अधिग्रहण प्रणाली के लिए तकनीकी विनिर्देश

Technical specification for Supervisory Control and Data Acquisition System for 25kV and 2x25 kV Single Phase 50Hz AC Traction Power Supply

नवंबर, 2023 में संशोधित Revised in: November, 2023

		हस्ताक्षर/Signature
अनुमोदित Approved by	प्रधान कार्यकारी निदेशक (कर्षण संस्थापन) Principal Executive Director (TI)	9/11/23
अनुशंसित Recommended by	कार्यकारी निदेशक (कर्षण संस्थापन) Executive Director (TI)	09/11/23

जारी कर्ता/ ISSUED BY:

कर्षण संस्थापन निदेशालय

TRACTION INSTALLATION DIRECTORATE,

अनुसंधान अभिकल्प और मानक संगठन

RESEARCH DESIGNS & STANDARDS ORGANISATION,

मानक नगर, लखनऊ- 226011

MANAK NAGAR, LUCKNOW-226011

NOTE: (i) This Specification is the property of RDSO. No re-production shall be done without the permission of DG (TI) RDSO.
(ii) All clauses of this Specification shall be enforced from cut-off date 15.05.2024.

	Prepared By	Checked By	Issued by
Signature	Vikash		Kumar
Date	09.11.2023	09/11/23	09/11/23
Designation	JE/ TI	ADE/ TI-3	DIRECTOR/ TI-3

2337166/2023/O/o PED/TI/RDSO

6076

SPECIFICATION FOR: Technical specification for Supervisory Control and Data Acquisition System for 25kV and 2x25 kV Single Phase 50Hz AC Traction Power Supply.

SPECIFICATION NUMBER: TI/SPC/RCC/SCADA/0134

Amendment History

Revision Number	Revision	Total pages including drawings	Date of Issue	Reasons for Amendment/ Revision
0	TI/SPC/RCC/SCADA/ 0990	109 Vol-1 79 Vol-2	August 08,2008	-
1	TI/SPC/RCC/SCADA/ 0130(Rev. 1)	71	December 12, 2014	-
2	TI/SPC/RCC/SCADA/ 0130(Rev. 2)	71	July 26, 2016	-
3	TI/SPC/RCC/SCADA/ 0133	94	July 30, 2021	-
4	TI/SPC/RCC/SCADA/ 0134	105	November 09, 2023	Cyber Security provisions included as per the directives of National Security Council Secretariat (NSCS), Government of India to address the Cyber Security Vulnerabilities present in the SCADA System. Inclusion of SEMC Setup in Specification. Segregation of EMS in RCC and SEMC. Inclusion of Efficient and Quick Fault finding Simulation Software for TPC Personnel (SCADA Training Module). Other minor changes such as inclusion of Power Quality Restorer (PQR) for telecommand and telesignals, Digital surge counter & Burglar Alarm for monitoring purpose, addition of clause related to Field Trials, Modification in Drawings, abbreviations and governing Specifications.

	Prepared By	Checked By	Issued by
Signature			
Date	09.11.2023	09.11.23	09/11/23
Designation	JE/ TI	ADE/ TI-3	DIRECTOR/ TI-3

2337166/2023/O/o PED/TI/RDSO

6077

INDEX

SECTION	HEADING
SECTION 1	SCOPE OF THE SPECIFICATION
SECTION 2	MASTER STATION EQUIPMENT
SECTION 3	SCADA SOFTWARE
SECTION 4	COMMUNICATION MEDIUM
SECTION 5	REMOTE STATION EQUIPMENT
SECTION 6	TELECOMMANDS, TELESIGNALS AND MEASURANDS
SECTION 7	TESTING AND COMMISSIONING
SECTION 8	TRAINING, MAINTENANCE AND WARRANTY
SECTION 9	ENERGY MANAGEMENT SYSTEM
SECTION 10	OPERATIONAL ASPECTS OF CYBER SECURITY IN SCADA SYSTEM FOR ZONAL RAILWAYS.

ANNEXURES

ANNEXURE 1	GOVERNING SPECIFICATIONS
ANNEXURE 2	SCHEDULE OF GUARANTEED PERFORMANCE
ANNEXURE 3	GENERAL ARRANGEMENT OF MASTER STATION COMPUTERS
ANNEXURE 4	POINT ADDRESS MAPPING
ANNEXURE 5	PROTECTION SCHEME FOR 25 KV AC TSS OF SUB-URBAN AREA
ANNEXURE 6	TRACTION SUPPLY ARRANGEMENT OF MUMBAI SUB URBAN AREA
ANNEXURE 7	GENERAL SCHEME OF SUPPLY FOR 25KV AC 50HZ SINGLE PHASE TRACTION SYSTEM.
ANNEXURE8	2X25 KV AC AT TRACTION SYSTEM POWER SUPPLY DIAGRAM
ANNEXURE 9	PROTOCOL – DIAGNOSTIC, DOWNLOADING, ETC.
ANNEXURE 10	ETR FORMATS
ANNEXURE 11	STANDARD FORMAT FOR GENERATION OF REPORT IN SCADA SYSTEM
ANNEXURE 12	LIST OF ABBREVIATION

SECTION 1

SCOPE OF THE SPECIFICATION

1.1 INTRODUCTION

The specification is applicable for development of SCADA system on Indian Railways for 25 kV AC traction power Supply system (including sub-urban) & 2X25 kV AC Auto Transformer Traction power supply system.

1.1.1 This specification covers various requirements of complete SCADA software and hardware. The SCADA system shall work with IEC 60870-5-104, a companion standard of IEC 60870-5 series of open protocol standards. The communication between RTU & each relay shall be either on IEC 61850 or IEC 60870-5-103 protocol. However, new RE work or replacement of both control & relay panels and SCADA system simultaneously, the communication between RTU and relays shall be on IEC 61850 protocols only.

The vendor shall have to develop SCADA system which communicates with relay on IEC 60870-5-103 and IEC 61850. NIFPES, multifunction meter/energy meter, anemometer, PQR, battery charger, Digital surge counter, Burglar Alarm etc. will communicate on MODBUS or IEC 61850 protocol.

1.1.2 Since SCADA system consists of a number of sub systems like software, hardware equipment like RTU, computers and other interface devices, it will be the responsibility of the manufacturer to provide successful integration & satisfactory performance of complete system. For this purpose, long term commercial and technical tie up with the OEMs, if any, shall be ensured by the manufacturer.

1.1.3 The SCADA system shall be of highest reliability and based on the state-of-the art technology. It shall be capable of monitoring and controlling traction power supply from a remote location called Remote Control Centre (RCC). It should enable TPC to monitor and control power supply to the remotely situated switching stations from RCC reliably and safely. The system should be capable of collecting, storing, displaying and analyzing data as stipulated in the specification.

1.1.4 Interpretation of any technical meanings of the specifications and sorting out technical disputes regarding this specification shall be decided by Director General (Traction Installation), Research Designs & Standards Organization, Lucknow (RDSO), whose decision shall be final and binding.

1.1.5 There shall be three main parts of the SCADA system – Master Station equipment, Remote Station equipment and Communication link (between RTU & RCC is in scope of S&T department of railway), details of which have been covered in this specification.

1.1.6 Remote Terminal Unit (RTU) shall serve as single point interface between switching stations (All TSS, SP and SSP) and master station.

1.1.7 The manufacturers shall familiarize themselves with site conditions before quoting against tenders based on this specification. Conditions particular to individual sites, including availability of communication and spare channels, conditions & space at RCC, switching posts, proximity to Road/Rail, sequence in

which RTUs sites will be offered by Indian Railways for taking up work, and any special conditions concerning erection and commissioning of SCADA system shall be got clarified in a pre-bid meeting to be arranged by the purchaser with the manufacturers.

1.1.8 It is to be noted that "The Make in India Policy of Government of India shall be applicable."

1.1.9 All the provision contained in RDSO's ISO procedure laid down in document No. QO-D-8.1-11 version 2.5 dated 30.11.2022 (Titled "Vendor- changes in approved status") and subsequent versions/amendments thereof, shall be binding and applicable on the successful vendor/vendors in the contracts floated by Indian Railways to maintain quality of products supplied to Indian Railways.

1.1.10 This specification supersedes the specification No. TI/SPC/RCC/SCADA/0133.

1.2 SERVICE CONDITIONS

The equipment at RCC shall be installed indoor and rooms shall be air conditioned. The SCADA equipment at control stations shall be installed inside track side cubicles/ rooms and subjected to vibrations on account of running trains on the near-by Railway tracks. The amplitude of these vibrations lies in the range of 30 to 150 microns, with instantaneous peaks going up to 350 microns. These vibrations occur with rapidly varying time periods in the range of 15 to 70ms. The track side cubicles will not be air-conditioned and are liable for exposure to polluted, dusty and corrosive atmosphere.

1.2.1 The locations at which the SCADA system equipment (RTU) in field is to function shall be subjected to heavy rains and lightning during monsoon. The extreme atmospheric condition limits for design purpose shall be as under:

SN	Description	Value For altitude up to 1000 m	Value for altitude above 1000m and upto 3000m
i.	Maximum ambient air Temperature	55^0C	55^0C
ii.	Minimum ambient air Temperature	-10^0C	-25^0C
iii.	Relative humidity: 24 h average	5% to 95%	5% to 95%
iv.	Maximum number of thunder storm days per annum	85 days	85 days
v.	Maximum Number of dust storm days per annum	35 days	35 days
vi.	Altitude	Not exceeding 1000 meters.	Above 1000 m and up to 3000m.

1.3 VOLTAGE AND FREQUENCY

1.3.1 At the RCC 415 Volts, 3 Phase 4 wire, 50 Hz AC supply shall be made available by the purchaser.

1.3.2 In case of failure of the ac supply at the RCC, all the RCC equipment shall be fed by the on line UPS.

1.3.3 The RTUs shall operate on 110 Volt DC supply provided by the Purchaser (V_{dc}: 110 +10% &-20%).

1.4 DESCRIPTION OF THE AC TRACTION SYSTEM ON INDIAN RAILWAYS (IR)

1.4.1 25 KV AC SINGLE PHASE TRACTION POWER SUPPLY SYSTEM

1.4.1.1 25kV, AC, 50Hz, single phase electric traction system has been adopted for the electric traction. Traction power is obtained from utilities at 220 / 132 / 110 / 66kV at Traction Sub Stations (TSS) and stepped down to 25 kV. Adjacent TSSs are spaced at a distance of 40 to 80Km.

1.4.1.2 The supply to the Over Head Equipment (OHE) from TSS is fed through interrupters located at Feeding Post (FP). Adjacent TSS normally supplies power to the OHE on different phases to reduce unbalance in the supply authority grid. To avoid the pantograph of a locomotive or electric multiple unit bridging the supply from different phases, when it passes from one zone to another, a Neutral Section is provided to separate the OHEs fed from different phases.

1.4.1.3 The switching station provided at neutral section is called Sectioning and Paralleling Post (SP). In an emergency, when a TSS is out of power, feed from adjacent TSSs on either side is extended up to the failed TSS by closing bridging interrupters at SP on both/all the lines. The pantographs of electric locomotives or electric multiple units is/are lowered at the failed TSS to avoid short-circuiting the phases at the insulated overlap.

1.4.1.4 Between TSS and adjacent neutral section, the OHE is divided into sub-sections for isolating the faulty section for the purpose of maintenance and repairs. The switching stations provided at such points are called Sub Sectioning and Paralleling Posts (SSP). The OHE of various tracks, in multiple track sections, are paralleled at the SP &SSP to reduce voltage drop in OHE. The sub sectors are further divided into elementary sections by the use of manually operated isolators.

1.4.1.5 At TSS, FP, SP and SSP, equipment like power transformers, circuit breakers, interrupters, single and double pole isolators, potential and current transformers, lightening arresters, LT supply transformers etc. are installed. A masonry building is provided for housing the control panels, SCADA equipment, battery and battery charger, etc.

1.4.1.6 All TSSs, FPs, SPs and SSPs are generally unmanned. OFF load/On load tap changing of the transformers, switching ON and switching OFF of CBs, interrupters and motor operated isolators are controlled through the SCADA system.

1.4.1.7 A Drawing showing general scheme of power supply for traction system is at Annexure-7.

1.4.1.8 Protective relays at the traction sub-stations

For protection of transformer, substation equipment's, shunt capacitor bank, the following relays are generally provided on control panels housed in the masonry cubicle at the traction substation (TSS).

(a) Transformer Protection

(i) Differential relay

(ii) IDMT over-current relays with additional elements of minimum 2 stage independent current and time settable definite time over current relays with enable/disable facility for the primary (HV) as well as for the secondary (LV) side.

The IDMT relay on the HV side is also provided with an instantaneous over-current element.

(iii) Instantaneous earth leakage relays on the primary (HV) side as well as on the secondary (LV) side.

(iv) High speed inter-tripping relay.

(v) Auxiliary relays for transformer faults i.e. Buchholz, excessive winding and oil temperature trip and alarm and low oil level alarm.

(b) Over head equipment protection

(i) Numerical integrated feeder protection module comprising:

- Polygonal characteristic distance relay.
- Wrong phase coupling relay.
- 2 stage Over Current Relay (stage 1 instantaneous and stage 2 Definite time for over load protection of catenary and contact wire)
- PT fuse failure relay.
- Auto reclosure relay.
- CB trip circuit supervision relays.
- Contact multiplication function for AP/GP low alarm, AP/GP low trip & lockout

(ii) Vectorial Delta-I relay for detecting high resistive faults.

(iii) Panto flashover prevention relay.

(c) Shunt Capacitor Bank Protection

(i) IDMT over-current protection relay with suitable settings.

(ii) Over voltage protection relay.

(iii) Under voltage protection relay with timer to enable the capacitors to discharge before re-closure.

(iv) Current unbalance protection.

1.4.2 DESCRIPTION OF THE AC TRACTION SYSTEM IN SUB URBAN AREA:

1.4.2.1 The conventional 25 kV AC system draws power from two of the three phases of the incoming EHV lines and transforms it to 25 kV AC. Power is drawn from different phases at adjacent TSSs, cyclically, to balance the load. The separation of phases on secondary side is carried out on the OHE contact wire system by providing "neutral sections" which do not draw power but provide mechanical continuity for passage of the pantograph. The drivers of trains are instructed to switch off the 25 kV AC circuit breakers of the locomotive to prevent flashover while the pantographs negotiate the neutral section.

The protection system of Sub-urban area has been designed with numerical protection relays, capable of isolating the shortest possible section in the fastest possible manner.

1.4.2.2 **Salient features of the Sub-urban area:**

Traction supply for Indian Railways traction substations shall be taken at 220 / 132 / 110 / 66kV AC from power supply authorities. Up to three adjacent traction substations which draw power from one supply authority may be operated in parallel on the 25 kV AC side. During exigencies the neutral sections can be activated by operating necessary switching devices.

The traction Power supply arrangement, sectioning diagrams & the protection scheme for the TSS are placed at Annexure 5 & 6. For further details manufacturer may refer to RDSO's specification No. TI/SPC/PSI/PROTCT/4050 or latest.

1.4.2.3 Protective relays at traction sub-station

(a) Differential biased bus bar protection relay for HV bus-bar

(b)Transformer Protection

i) Numeric Percentage biased differential relay

ii) IDMT over-current relays for the primary as well as for the secondary (25 kV AC) side. The IDMT relay on the HV side is provided with an instantaneous overcurrent element also.

iii) Instantaneous earth leakage relays on the primary side as well as on the secondary (25 kV AC) side.

iv) High speed inter-tripping relay.

v) Auxiliary relays for transformer faults i.e., Buchholz, excessive winding and oil temperature trip and alarm and low oil level alarm.

vi) Reverse power flow relay.

(c) 25 kV AC bus bar and Over head equipment protection.

i) High impedance type differential protection relay for bus bar

ii) Feeder protection

- Directional numerical distance protection relay with 3 zones and polygonal characteristics.
- Wrong phase coupling
- Directional definite time over current relay with instantaneous over current element.
- PT fuse failure
- Intelligent logic based auto recloser.

iii) Vectorial Delta-I Relay for detecting high impedance faults.

iv) Panto flashover prevention & signalling relay (optional)

1.4.2.4 For SSPs

i) Directional Numerical distance protection relay with 3 zones and polygonal characteristics.

ii) Directional definite time over current relay

iii) High impedance type differential protection relay for bus bar

iv) Panto flashover prevention & signalling relay (optional).

v) Intelligent Logic based auto reclosures.

vi) PT fuse failure

1.4.2.5 For SPs

i) Directional Numerical distance protection relay with 3 zones and polygonal characteristics.

ii) Directional definite time over current relay

iii) High impedance type differential protection relay for bus bar

iv) Over current protection relay for bridging CB

(v) Under voltage protection relay for bridging CB

vi) Panto flashover prevention & signalling relay (optional).

vii) Intelligent Logic based auto reclosures.

viii) PT fuse failure

1.4.3 2x25 kV AC AUTO TRANSFORMER(AT) TRACTION POWER SUPPLY SYSTEM

1.4.3.1 The power for electric traction is supplied in AC 50 Hz, single phase through 2 x 25 kV AT feeding system, which has a feeding voltage (2x25 kV AC) from the sub-station two times as high as catenary voltage (25 kV AC). This high voltage

power supplied from the sub-station through, catenary wire and feeder wire is stepped down to the catenary voltage by use of autotransformers (ATs) installed about every 13 to 17 km along the track, and then fed to the locomotives. In other words, both the catenary voltage and feeder voltage are 25 kV AC against the rail, although the sub-station feeding voltage between catenary and feeder wires is 50 kV AC. Therefore, the catenary voltage is the same as that of the conventional 25 kV AC system.

Since the power is supplied at double the OHE voltage, the 2x25kV AT system is suitable for a large power supply and it has the following advantages as compared with the conventional 25kV AC system.

(a) Less Voltage drop in feeder circuit.
(b) Large spacing of traction substations.
(c) Less telecommunication interferences.
(d) Suitable for high-speed operation.

The power is obtained from 60/84/100MVA, ONAN/ONAF/OFAF, 220kV/ 2X55kV or 132kV/2X55kV or 110kV/2X55kV or 66kV/2X55kV and 54MVA, 220kV/2X(2X27) kV Scott Connected Traction Power Transformer/21.6MVA, ONAN & 38/53/63MVA ONAN/ONAF/OFAF, 220kV/2X27.5kV or 132/2X27.5kV or 110/2X27.5kV or 66/2X27.5kV single phase dual LV winding traction power transformer. In the Scott connected TSS- 8, 12.3, 16.5 MVA, ONAN, 55kV/27.5kV Autotransformer are also provided at the traction sub-station. The primary windings of the transformers are connected to two or three phases of the 220 or 132 or 110 or 66 kV AC, three-phase, effectively earthed transmission net-work of the Electricity Board/supply authority, in case of a single-phase transformer or in case of two single phase V-connected transformers/Scott-connected transformer respectively. The Scott-connected transformer and V-connected single-phase transformers are effective in reducing voltage imbalance caused by the traction loads on the transmission net-work of the Electricity Board. The spacing between adjacent sub-station is normally between 70 to 100 km.

One outer side terminal of the secondary windings of traction transformer is connected to the catenary, the other outer side terminal being connected to the feeder. Two inner side terminals are, via series capacitors or directly, connected to each other, and their joint is solidly earthed and connected to the running rails in case of V-connected transformer or Scott connected transformer of Bina-Katani section. NDLS-BCT & NDLS-HWH 2x25 kV AC rail routes, the TSS provided with Scott connected transformers, centre point of transformers is neither earthed nor connected to running rail. The load current from the sub-station flows through the catenary and normally returns to the sub-station through the feeder. In V-connected TSS of NDLS-BCT & NDLS-HWH 2x25 kV AC rail routes, some part of load current of first sub-sector flow through earth. Between two adjacent ATs, the load current fed from the catenary to the locomotive flows in the rail and is boosted up to the feeder through the neutral tap of the two ATs.

Midway between two sub-stations, a sectioning and paralleling post (SP) is introduced. At the points of sub-station and sectioning and paralleling post (SP), a dead zone known as neutral section is provided in OHE to avoid a wrong phase coupling. The power to the catenary and feeder on each side of the sub-station is fed by two feeder circuit breaker (in case of double line section), even if there

exist two breakers for one side, and each track is controlled by an interrupter. The two breakers are used as a stand-by for one each other. For maintenance work and keeping the voltage drop within limits one or more sub-sectioning and paralleling posts (SSPs) are introduced between traction sub-station and SP. On a two track section, a SSP normally has four sectioning, one paralleling interrupters and two CBs for auto transformer. A SP of two track system normally has two sectioning and paralleling interrupters, two bridging circuit breakers and four CBs for auto transformer. Motorized Isolators wherever applicable as per layout will be provided across the IOL in front of SSP & SP for bridging/ sectioning & these will be operated locally/ from RCC. In case of fault on the OHE, the corresponding feeder circuit breaker of the sub-station trips and isolates it.

A schematic diagram of TSS, SSP & SP for two line section are given in Annexure-8. RDSO has finalized an instruction no. TI/IN/0043 Rev,0-PSI guideline for increasing speed potential to 160 kmph on NDLS-HWH & NDLS-BCT routes. This instruction includes drawing numbers of different type of layouts of 2x25 kV TSS, SSP & SP. The list of different type of layouts of 2x25kV TSS, SSP & SP is given below:

List of the layouts of the 132/2X25kV AC TSS

SN	Description	Drawing No.
1.	Typical layout of 132/2X25Kv traction Sub Station with Scott Connected Transformers (For Double Line section) with parallel to track.	TI/DRG/PSI/AT/ RDSO/00009/20/0 MOD D or latest.
2.	Typical layout of 132/2X25Kv traction Sub Station with Scott Connected Transformers (For Double Line section) with perpendicular to track.	TI/DRG/PSI/AT/ RDSO/00010/20/0 MOD D or latest.
3.	Typical layout of 132/2X25kV traction Sub Station with Scott Connected Transformers (For Three Line section) with parallel to track.	TI/DRG/PSI/AT/ RDSO/00030/20/0 MOD C or latest.
4.	Typical layout of 132/2X25kV traction Sub Station with Scott Connected Transformers (For Three Line section) with perpendicular to track.	TI/DRG/PSI/AT/ RDSO/00031/20/0 MOD C or latest.
5.	Typical layout of 132/2X25kV traction Sub Station with Scott Connected Transformers (For Four Line section) with parallel to track.	TI/DRG/PSI/AT/ RDSO/00032/20/0 MOD C or latest.
6.	Typical layout of 132/2X25kV traction Sub Station with Scott Connected Transformers (For Four Line section) with perpendicular to track.	TI/DRG/PSI/AT/ RDSO/00033/20/0 MOD C or latest.
7.	Typical layout of 132/2X25kV traction Sub Station with V-Connected Transformers (For Double Line section) with parallel to track.	TI/DRG/PSI/AT/ RDSO/00034/20/0 MOD C or latest.
8.	Typical layout of 132/2X25kV traction Sub Station with V-Connected Transformers (For Double Line section) with perpendicular to track.	TI/DRG/PSI/AT/ RDSO/00035/20/0 MOD C or latest.
9.	Typical layout of 132/2X25kV traction Sub Station with V-Connected Transformers (For Three Line section) with parallel to track.	TI/DRG/PSI/AT/ RDSO/00011/20/0 MOD C or latest.

10.	Typical layout of 132/2X25kV traction Sub Station with V-Connected Transformers (For Three Line section) with perpendicular to track.	TI/DRG/PSI/AT/ RDSO/00012/20/0 MOD C or latest.
11.	Typical layout of 132/2X25kV traction Sub Station with V-Connected Transformers (For Four Line section) with parallel to track.	TI/DRG/PSI/AT/ RDSO/00013/20/0 MOD C or latest.
12.	Typical layout of 132/2X25kV traction Sub Station with V-Connected Transformers (For Four Line section) with perpendicular to track.	TI/DRG/PSI/AT/ RDSO/00014/20/0 MOD C or latest.

List of the layouts of the SP & SSP

SN	Description	Drawing No.
1.	General arrangement of Sub sectioning and Paralleling Post (SSP) in 2X25kV 'AT' System (on double line section) for Scott Connected Transformer TSS	TI/DRG/PSI/AT/ RDSO/00015/20/0 MOD A or latest.
2.	General arrangement of Sectioning and Paralleling Post (SP) in 2X25kV 'AT' System (on double line section) for Scott Connected Transformer TSS	TI/DRG/PSI/AT/ RDSO/00016/20/0 MOD A or latest.
3.	General arrangement of Sub sectioning and Paralleling Post (SSP) in 2X25kV 'AT' System (on double line section) for V- Connected Transformer TSS	TI/DRG/PSI/AT/ RDSO/00036/20/0 MOD A or latest.
4.	General arrangement of Sectioning and Paralleling Post (SP) in 2X25kV 'AT' System (on double line section) for V- Connected Transformer TSS	TI/DRG/PSI/AT/ RDSO/00037/20/0 MOD A or latest.
5.	General arrangement of Sub sectioning and Paralleling Post (SSP) in 2X25kV 'AT' System (on three line section).	TI/DRG/PSI/AT/RDSO/ 00017/20/0 MOD A or latest.
6.	General arrangement of Sectioning and Paralleling Post (SP) in 2X25kV 'AT' System (on three line section).	TI/DRG/PSI/AT/RDSO/ 00018/20/0 MOD A or latest.
7.	General arrangement of Sub sectioning and Paralleling Post (SSP) in 2X25kV 'AT' System (on four line section).	TI/DRG/PSI/AT/RDSO/ 00019/20/0 MOD A or latest.
8.	General arrangement of Sectioning and Paralleling Post (SP) in 2X25kV 'AT' System (on four line section.	TI/DRG/PSI/AT/RDSO/ 00020/20/0 MOD A or latest.
9.	General arrangement for Boundary Sectioning and Paralleling Post (SP) in 2X25kV 'AT' System (on double line section)	TI/DRG/PSI/AT/RDSO/ 00021/20/0 MOD A or latest.
10.	General arrangement for Boundary sectioning & paralleling post (SP) in 2 x 25 kV 'AT' system (on 3 line section)	TI/DRG/PSI/AT/RDSO/ 00022/20/0 MOD A or latest.
11.	General arrangement for Boundary sectioning & paralleling post (SP) in 2 x 25 kV 'AT' system (on 4 line section)	TI/DRG/PSI/AT/RDSO/ 00023/20/0 MOD A or latest.

List of the layouts of the 220/2X25kV AC TSS

SN	Description	Drawing No.
1.	Typical layout of 220/2X25kV traction Sub Station with Scott Connected Transformers (For Double Line section) with parallel to track.	TI/DRG/PSI/AT/ RDSO/00024/20/0 MOD D or latest.
2.	Typical layout of 220/2X25kV traction Sub Station with Scott Connected Transformers (For Double Line section) with perpendicular to track.	TI/DRG/PSI/AT/ RDSO/00025/20/0 MOD D or latest.
3.	Typical layout of 220/2X25kV traction Sub Station with Scott Connected Transformers (For Three Line section) with parallel to track.	TI/DRG/PSI/AT/ RDSO/00038/20/0 MOD C or latest.
4.	Typical layout of 220/2X25kV traction Sub Station with Scott Connected Transformers (For Three Line section) with perpendicular to track.	TI/DRG/PSI/AT/ RDSO/00039/20/0 MOD C or latest.
5.	Typical layout of 220/2X25kV traction Sub Station with Scott Connected Transformers (For Four Line section) with parallel to track.	TI/DRG/PSI/AT/ RDSO/00040/20/0 MOD C or latest.
6.	Typical layout of 220/2X25kV traction Sub Station with Scott Connected Transformers (For Four Line section) with perpendicular to track.	TI/DRG/PSI/AT/ RDSO/00041/20/0 MOD C or latest.
7.	Typical layout of 220/2X25kV traction Sub Station with V-Connected Transformers (For Double Line section) with parallel to track.	TI/DRG/PSI/AT/ RDSO/00042/20/0 MOD C or latest.
8.	Typical layout of 220/2X25kV traction Sub Station with V-Connected Transformers (For Double Line section) with perpendicular to track.	TI/DRG/PSI/AT/ RDSO/00043/20/0 MOD C or latest.
9.	Typical layout of 220/2X25kV traction Sub Station with V-Connected Transformers (For Three Line section) with parallel to track.	TI/DRG/PSI/AT/ RDSO/00026/20/0 MOD C or latest.
10.	Typical layout of 220/2X25kV traction Sub Station with V-Connected Transformers (For Three Line section) with perpendicular to track.	TI/DRG/PSI/AT/ RDSO/00027/20/0 MOD C or latest.
11.	Typical layout of 220/2X25kV traction Sub Station with V-Connected Transformers (For Four Line section) with parallel to track.	TI/DRG/PSI/AT/ RDSO/00028/20/0 MOD C or latest.
12.	Typical layout of 220/2X25kV traction Sub Station with V-Connected Transformers (For Four Line section) with perpendicular to track.	TI/DRG/PSI/AT/ RDSO/00029/20/0 MOD C or latest.

1.4.3.2 **Protection System at traction sub-station**:

1.4.3.2.1 The following protection functions shall be provided for the protection of traction transformers:

(a) Differential protection.
(b) IDMT over current protection on HV & LV sides.
(c) Earth fault protection on HV & LV sides.

(d) Instantaneous over-current protection on receiving side.
(e) Phase-failure relay on LV side (to detect a malfunction of a LV circuit breaker).
(f) Auxiliary relays for transformer faults i.e., Buchholz, excessive winding and oil temperature trip and alarm, pressure relief device trip and low-oil level alarm

1.4.3.2.2 The following protection functions shall be provided for the protection of OHE:

a) 3-Zone distance protection (with a polygon protection characteristic)
b) Delta-I type high resistive fault protection
c) Instantaneous over-current protection with 2-stage definite time over current element.
d) Under-voltage relay to prevent closing of Feeder CB under extended feed conditions
e) PT fuse failure protection
f) 2-shot Auto Reclose function.

1.4.3.2.3 Protection of HT capacitor & series reactor

(a) IDMT over current relay
(b) Over voltage relay
(c) Under voltage relay
(d) Current unbalance relay
(e) Voltage Unbalance Relay

1.4.3.2.4 Protection of Auto Transformer

(a) AT differential Protection Relay
(b) Voltage operated auxiliary relays for Transformer faults. i.e., Buchholz, PRD, Winding Temp. & Oil Temp.

1.4.3.3 Protection System at SSP, SP & AT Posts:

(a) AT differential Protection Relay
(b) Voltage operated auxiliary relays for Transformer faults. i.e. Buchholz, PRD, Winding Temp. & Oil Temp.

1.4.3.4 All traction substations and switching stations are normally unattended and off circuit tap changer of the transformer, circuit breakers, interrupters, and motorized isolators are operated remotely from the RCC through the SCADA equipment.

The off-circuit tap changer of the transformer, circuit breakers, interrupters and motorized isolators could also be operated locally as well as manually at the TSS, SP, SSP and AT post as the case may be. At the TSS, a local/remote changeover switch is provided on the control panel, as well as in the mechanism box of the circuit breaker, interrupter and motorized isolator. No control panel exists for the interrupters/circuit breakers at the SP and SSP of 25 kV AC traction and therefore the local/remote changeover switch is provided on the mechanism box of the interrupter/circuit breaker. At SSP and SP of 25 kV AC traction of Mumbai Sub-urban area and SSP, SP and AT post of 2x25 kV AC traction, local / remote changeover switch is provided on the control and relay panel.

SECTION 2

MASTER STATION EQUIPMENT

2.1. INTRODUCTION

The Master station shall consist of latest Microsoft Windows or Linux operating system-based SCADA software, running on Server grade computers in dual-redundant mode & MMI running on workstation grade PCs. All the equipment required for interconnection & smooth functioning shall also be part of master station equipment. The overall scheme for Master station equipment shall generally conform to that shown in Annexure-3.

2.1.1. The Routers, Converters and telecom media with provision of LAN extenders or media converters (as required with copper or OFC medium respectively) shall be provided and maintained by S&T wing of railway. In case of OFC telecom media up to switching post & RCC, S&T shall provide 100BaseFX duplex interface suitable for single-mode fiber (9/125), 1310nm at switching post and RCC. In case of quad media (copper cable) between OFC hut and switching post, and at RCC, S&T shall provide Ethernet connectivity compatible as per 10/100BaseT/TX standard at switching post and RCC. All equipment provided by S&T shall support the SNMP v2c or SNMP v3 protocol. Network provided by S&T should provide the SCADA vendor the freedom to choose the IP subnets. No firewalling shall be implemented by the Purchaser on the provided network. Formation of communication ring should be achieved independent of connectivity with RTU. Guaranteed bandwidth of 128kbps minimum per RTU shall be ensured by the Purchaser. The LAN switches, bandwidth management hardware & software and networking wiring etc. in RCC shall be within the scope of supply of successful SCADA manufacturer.

2.2 SCADA SYSTEM- FUNCTIONAL REQUIREMENT

2.2.1 RCC setup shall comprise of two server grade computers both in hot standby mode. The server grade computers shall be rack mountable. Server racks to be provided at RCC/SEMC shall be provided with on-door biometric security control to gain access to the racks. At least 100 numbers of RTUs shall be catered by one set of SCADA server. There shall be separate, dedicated, redundant communication front-ends capable of handling the communication loading of 100 RTUs. The specifications of the front-ends shall be same as per SCADA server. Two workstation-grade PCs in client server architecture shall be provided at RCC for every 15 RTUs to be integrated. E1 channels and communication equipment provided by S&T wing of Railway shall be used for communication between SCADA and RTUs. One E1 channel along with protection E1 channel shall be used for suitable number of RTUs with ensuring bandwidth of at least 128kbps per RTU. RTUs shall communicate with RCC for transfer of events/alarms & measurands in addition to implementing telecommands. There shall be a provision of single set of Energy Management System (EMS) Servers at RCC in hot standby mode and two Workstation-Grade PCs. There shall also be a provision of single Network Management System (NMS) Server with network management software and one Workstation-Grade PCs at RCC. The interface between SCADA Servers and EMS system at RCC shall use ICCP-TASE.2/ IEC 60870-5-104 protocol/ DLMS/OPC or any interoperable standard interface. SCADA vendor shall be fully responsible to interface additional RTUs in existing SCADA, EMS and NMS system provided as per this specification at RCC. Separate web server shall be provided in RCC as a provision to access the SCADA/EMS data from any predefined location through internet. Further, there should be provision of patch management software in web server that shall host all the software/firmware patches, anti-virus software to be installed in various RCC computers/RTUs. Necessary firewall to be provided for keeping the system safe from intrusion of virus from outside world as per latest Cyber security standards.

The single set of SCADA Server with front end & EMS Server along with 1 no. of NMS & Web Server shall support at least 100 RTUs. However, beyond more than 100 RTUs, the specific requirements of various servers like SCADA/EMS/NMS/WEB Server at RCC shall be mentioned in the tender documents by tendering authority while floating tender for additional section.

As per IEC 60870-5-104, all events shall be reported as unsolicited data from the RTU; however, there shall be provision of a data integrity check (General Interrogation- 6.6 of IEC 60870-5-5) providing periodic update of the Group Scan data, which may be done after every 15 minutes or more. Master will transmit the general interrogation command repeatedly after the period configured and will obtain data to ensure the health of communication network.

a. Configuration of Workstation-

i. Each operator workstation will consist of two workstation-grade (not Desktop) PCs.

ii. One PC will have provision for connecting four 42±1" signage display. By default, there is a provision of two (2) Displays; however the number may increase if the section is large enough. The SCADA vendor shall consider this aspect and quotation for the same shall be mentioned clearly. To achieve this, each workstation grade PC shall be provided with a quad-output graphics display adapter. A virtual desktop shall be created spanning across all the Displays. The graphics adapter shall have built-in memory of minimum 4 GB, and support resolutions up to 1920x1080. The existing TPC room, where the space constrains, smaller size display may be permitted with the approval of PCEE. In such case size of display shall be specifically mentioned in the tender.

iii. The second PC shall be provided with a single 42±1" signage and a second output for connecting to the display wall.

iv. The SCADA software should support splitting of the SCADA graphics across the Displays or SCADA hardware shall be supported multiple VDUs and display shall be shown in multiple window.

b. SCADA Workstation Requirements

i. Single graphics display should be able to be viewed across the multiple Displays, as if being viewed on a large screen.

ii. Keyboard and mouse functions shall work across all Displays as with normal desktops

iii. The software shall allow opening of multiple simultaneous windows in each VDU.

iv. The SCADA graphics should support zoom in/out facility with clutter/de-clutter function. When zooming in more details (static as well as dynamic data) on the graphics should become visible, and when zooming out the details should get hidden with only salient/important information visible.

v. The zooming facility should not cause loss of clarity of the displayed information.

vi. The clutter/de-clutter function shall be configurable by the system engineer during graphics engineering.

vii. Using the above functions, a single graphics shall be created which provides complete overview of the traction network being monitored/ controlled.

2.2.2 The server meant for EMS, storing data related to Energy Parameters collected from each TSS will acquire Energy data from the SCADA server and will update its data

bank. Necessary protection against virus shall be provided in each machine on the network. The electrical parameters stored in the SCADA server and EMS server shall be displayed on MMIs at Work station. HVCB/Line CB status to be monitored and should be reported in RCC along with energy parameters. Energy parameters and switch status to be stored in EMS server.

Following data and its alarm events will be stored:

- Voltage
- Current
- Frequency
- Power Factor
- Active & Reactive Power
- Energy
- MD (from RTU or from MFM/ABT meter through RTU): Configurable (window time) from 1 to 30 minutes in steps of 1 minutes & Instantaneous 15 Minutes (Current Block) MD

Alarms & Events shall be generated for the following:

- Over & Under Voltage
- Over Current
- Over & Under Frequency
- MD Violation

2.2.2.1 The separate web server shall be installed in RCC for accessing the SCADA/EMS data from any centralized location through internet/railnet. There shall be provision to configure the server to transfer the P, Q, I, V, f and energy data along with CB status from divisional RCC and Railway SLDC and as per IEC 60870-5-104 over TCP/IP through railnet. Purchaser to arrange for the necessary railnet / Internet within RCC Location. Purchaser shall ensure to provide necessary network attributes for railnet i.e., Port forwarding / Static IP/s / Opening of Certain Ports or any settings which will be required make the system accessible from any given location across Indian Railways. Further, web server shall also carry the process of patch management so as to install the various software/firmware patches, anti-virus software in RCC computers/RTUs through internet/railnet.

2.2.3 The manufacturer shall also ensure that in addition to above, any further addition of RTUs shall also be possible by simply adding two additional Workstation-grade PCs as MMI per 15 RTUs on the existing LAN.

2.2.4 The LAN setup shall be so designed that installation at RCC center is conveniently possible through standard plugs and sockets. All wiring at RCC and interconnection of computers shall be done by the manufacturer. The purchaser shall make the data communication link with RTUs available within 50 Meters of the RCC computers. The successful manufacturers shall have to provide & make necessary connections between the RCC computer/LAN switch/Fire wall/Routers with all capability to manage the bandwidth. Telecom media and telecom communication equipment shall be provided by S&T wing of railway. The successful manufacturer shall also provide the wiring properly enclosed in plastic trays to avoid any damage.

2.2.5 The servers shall be loaded with the necessary software for communication with the RTUs. All the functionality of the communication, diagnostics and failover will be possible from the Main and Standby Servers. These two separate server grade computers shall operate in redundant hot standby mode. The active server shall continuously communicate with the RTUs of the remote stations & process the data collected, in

addition to displaying the same on the work-stations (MMI). The hot standby server with same software shall automatically take-over in case of failure of active server. The changeover shall not take more than 60 seconds.

2.2.6 All computers would be connected on dual redundant Ethernet LAN using four numbers of layer-2 or higher switches. Each of these switches should have at least 24 nos. Gigabit copper ports and 4 nos. Gigabit single mode optical ports. Switches should have dual power supply. The detail arrangement with two communication channels shall be as per Annexure -3.

2.2.7 A GPS receiver with antenna shall also be provided to synchronize the timing of the servers with that of standard satellite timing. This shall ensure that all the date/time stampings of the reports generated by the SCADA system would be accurate & hence comparable to any external report. Make & specification of GPS receiver should be submitted to RDSO at the time of design documents approval.

2.2.8 The specification for the computers & peripherals to be used in the RCC is as below. This is the recommended requirement for satisfactory functioning of the SCADA system. The purchaser shall review these at the time of tendering and may opt for a better option. In such a case purchaser shall specify the detailed technical requirement in the tender. The manufacturer can also offer a better version; however, in such a case the manufacturer shall submit his proposal with full details.

2.2.8.1 **Details of the workstation PC, server & accessories**

Item	**Servers**	**Workstation-grade PCs**
Brand/Make	Any reputed make	Any reputed make
Processor	Minimum Octa Core Processor with base frequency of 3.0 GHz. For higher no. of cores: Minimum base frequency of 2.0 GHz.	Minimum i7 Processor with latest generation
RAM size	At least 64 GB upgradable up to 128GB	8 GB
Solid State Drive (SSD)	Total storage minimum of 1.92 TB Solid state drive (SSD) shall be hot-swappable and provided in RAID 1 configuration using hardware RAID controller (RAID to be retained for better reliability)	Minimum 960 GB, SATA
Monitor, keyboard & mouse	One 15" HD KVM rack mounted console shall be provided for the entire set of 8 servers, and should be installed in the 42U rack.	42±1 inch Signage Display
Video Card	Standard Graphics controller	ATI/NVIDIA graphics controller with 4GB RAM
Multimedia with accessory	Not required	Required
EMI immunity	As per IEC 61000	As per IEC 61000
Network Interface Card	Network Interface Card (Server & WS): Standard 10/100/1000 Mbps	Network Interface Card (Server & WS): Standard 10/100/1000 Mbps

2337166/2023/O/o PED/TI/RDSO

6092

	Base-T Ethernet Port-4 nos. 1GbE ports – 2nos. for SCADA LAN; 2nos. for RTU network. This is required to isolate the RTU network from the SCADA LAN. Based on availability, following shall be provided: • 2 separate NIC cards with 2 no. of LAN ports on each card, configured in redundant mode. Also, on board NIC can also be used for the above purpose.	Base-T Ethernet Port-02 nos. Based on availability, following shall be provided: • 2 separate NIC cards with 2 no. of LAN ports on each card, configured in redundant mode. Also, on board NIC can also be used for the above purpose.
Number of USB ports	2 minimum.	2 minimum
Accessories	Including all cables/ connectors/ accessories to achieve the complete working of the system.	Including all cables/ connectors/ accessories to achieve the complete working of the system
Operating System	MS Windows Server 2019 NT10.0 or latest / latest version of Linux	Windows 10 or higher.
Power supply	Server should have redundant hot-swap power supplies.	

2.2.8.2 **Details of LAPTOP**

Item	**Description**
Brand / Make	Any reputed make
Type of Processor	Intel core i5 with latest generation
RAM size	Minimum 8GB DDR4
Hard disk	960 GB SSD
Multimedia with accessory	In-built speakers
Display	15" Full HD LED Backlit Anti- glare IPS display
Screen Resolution	Minimum 1920*1080 pixel
Number of ports	USB: Minimum Three, Ethernet port: Minimum 1, HDMI:1 (If Laptop does not have Built- in Ethernet port, then USB to Ethernet Converter shall be supplied.)
Accessories	With external 220 V AC 50Hz power supply adapter. Appropriate carrying case.
Operating System	MS Windows 10 or higher.
OS & System Architecture	64 bit

2.2.8.3 **Data logger Printer**

Two A4 Color Laser printers with 1x10/100 Mbps Ethernet interface shall be supplied and networked. Consumables like paper, cartridges shall be provided by Purchaser.

2.2.8.4 **LAN Stackable Switch**

Eight numbers of manageable layer-2 switches. Each of these switches should have at least 24 nos. Gigabit copper ports and 4 nos. Gigabit single mode optical ports and RJ 45 interface shall be provided. Switches should have dual power supply. The switch shall be of any reputed make.

2.2.8.5 **Display wall**

Display wall consisting of 2x3 matrix of 50" full HD single display, with 3 mm bezel is accepted as display wall is the latest technology. One display wall shall be provided in a RCC. Zonal railway will have to mention in the tender about wall display is required or not.

When required the display of the operator workstation shall be projected onto the display wall so that a multiple viewers can view/analyse the displayed information. The necessary accessories of display wall shall also be provided by SCADA manufacturer.

2.3 Details of UPS

The manufacturer shall provide a reliable on-line UPS system of 2x10 kVA rating along with the batteries and associated equipment. The details of 2x10 kVA UPS system shall be as under.

Item	Description
Rating	Each UPS shall be continuously rated for 10 kVA at 0.8 PF, **Input:** 3-Phase 415 +10% & -15% V AC, 50±3% Hz, **Output:** Stabilized 240V AC, 50 Hz. Note: In place of individual UPS for each set of server along with work station, a higher capacity of UPS with suitable capacity of battery set may be opted by zonal railway for RCC having more number of servers set and work stations. The capacity of UPS in such cases shall be decided by Zonal Railway and specifically shall have to be mentioned in the tender.
Arrangement type	One UPS of 10 kVA rating shall be sufficient to cater for the entire load of RCC (maximum 6 kVA at 0.8 PF). The UPS system shall operate in dual redundant hot standby mode where another 10 kVA UPS shall provide 100% redundancy to the system. The malfunction of online UPS shall cause it to automatically isolate from the system and the other UPS shall take up the load without any interruption. Each UPS shall be designed to operate as a true on-line, double conversion system where the UPS output is independent of input supply voltage & frequency variations. Both the UPS unit shall share/connected to a single battery set. The bus voltage of Battery Bank shall be 110V DC or higher suitable to UPS. The UPS shall have Cold start facility.
Battery	VRLA batteries of sufficient AH capacity to cater the full RCC load for minimum 3 hours shall be provided. The batteries shall be

2337166/2023/O/o PED/TI/RDSO

6094

	suitable for UPS applications. (110V DC or higher battery system so that the UPS and batteries could be used Interchangeably). The ampere-hour rating to be decided based on the voltage & minimum 3 hrs. backup time & to be mentioned in the design drawings.
Output voltage distortion	± 2% total harmonic distortion (THD) for 100% linear Load and ± 4% for 100% nonlinear load (EN 62040-3:2001).
Display of the status of UPS in RCC	Linear display of voltage in UPS (415V AC, 240V AC and Battery DC), UPS failure indication along with alarm shall be displayed on the MMI or close to work station for alerting the concerned TPC.

2.3.1 The scope of work shall comprise of UPS supply wiring to cover all RCC computers, peripherals and communication equipment e.g., MODEMs, hubs etc. This shall also include supply and wiring of 8 W Bulb/tube for each computer workstation & any other emergency light points in RCC. An AC distribution board with 12 outlets (6 each of 15A & 5A) from UPS supply shall also be provided.

2.3.2 The manufacturer shall purchase the UPS system from reputed suppliers and its inspection shall be carried out by purchaser at the time of routine testing to verify the key functional requirements. The responsibility of ensuring good quality & service performance of UPS system lies with the manufacturer.

2.3.3 The UPS shall be suitable for operation with computer-based equipment. Alarm and display facilities shall be provided on the front panel of the UPS for easy troubleshooting, operation and maintenance.

2.3.4 UPS shall have real time online remote monitoring and control facility like using Simple Network Management Protocol (SNMP)/MODBUS. All major electrical parameters of UPS must be integrated into SCADA System.

2.4 Accessories for RCC

The supply of appropriate worktable & chair of Godrej Make or any equivalent make suitable to RCC layout and requirements of user shall be within the scope of this specification and the manufacturer shall quote for the same as per the number of servers and work stations mentioned in the tender document.

The RCC set up of servers/MMIs is shown under Annexure-3. The furniture requirement for the same shall be as under:

2.4.1 All servers (including monitor/keyboard/mouse) and communication equipment like Routers, switch, connectors, GPS etc. shall be kept in separate server 42 U (maximum) Racks.

2.4.2 MMI computer workstations shall be made with the Godrej Finesse 6030 computer tables or equivalent.

2.4.3 Six Godrej - Multitask seating-E5002T model or equivalent swiveling chairs and 6 nos. visiting chairs of Godrej-STAQ type or equivalent shall be supplied.

2.4.4 The selection of racks/cabinets shall be such that ingress of dust to computer hardware is minimum. Number of racks/cabinets shall be as per the requirement of purchaser.

2.4.5 For addition of each workstation, one workstation computer table along with a swiveling chair and three visiting chairs of above make shall be supplied.

2.4.6 The above requirement of the RCC accessories is indicative only. The actual requirement of RCC accessories shall be decided by Zonal Railways according to site condition. The requirement of RCC accessories shall be mentioned in the tender by zonal railway.

2.5 The one set of SCADA servers as per this specification are compatible to cater at least 100 number of RTUs. Therefore, in case of addition of switching stations of additional sections/ addition of new switching stations in existing section with RCC already provided as per this specification, the requirement of SCADA Servers and other necessary RCC equipments shall be finalized by Zonal Railways. The requirement of RCC equipments shall be specifically mentioned in the tender document.

2.6 The manufacturer shall follow recommended secure development practices regarding Cyber Security as per IEC 62443-4. The relevant certification and compliance related to secure development practices shall be submitted by Vendors from a certifying body accredited to assess devices and process for compliance to IEC 62443-4 during design and manufacture for inspection at the time of design, drawing approval. The CEA (Cyber Security in Power Sector) Guidelines, 2021 or latest by Ministry of Power, Government of India, shall be followed for the same.

2.7 The manufacturer shall provide user manuals and documents (mentioned in Section 10) to Zonal Railways which shall include security guidelines related to operation and maintenance of the system.

SECTION 3

SCADA SOFTWARE

3.1 INTRODUCTION

3.1.1 SCADA software shall be capable of working on latest version of Microsoft WINDOWS or Linux operating system. Master station SCADA application software shall also include licensed copies of OS for all terminals, LAN interface software, diagnostic software, Communication system analysis software, Antivirus Software, Network Management System (NMS) software, Structured Query Language (SQL) and any other software essentially required for satisfactory working of the system. This shall also include the software for RTU and / or LAN driver etc. The license fee wherever applicable of any of the above software shall be borne by the successful manufacturer.

The SCADA software license should be handed over to the division. Any updates/patches of the SCADA software as released by the SCADA OEM shall be made available to Indian Railways.

3.1.2 The software shall be compatible for working on IEC 60870-5-104 companion standard protocols. It shall also support multiple channels for communication to all RTUs.

3.1.2.1 The software shall fully support file transfers for disturbance recording from protection relay between RTU & RCC automatically as defined by different IEC 60870-5-104 of standards or SFTP based file transfer. Protection relays supports IEC 60870-5-103 or IEC 61850 protocol or SFTP based file transfer. The Disturbance file format shall be COMTRADE.

3.1.2.2 The manufacturer shall be fully responsible for effective working of SCADA software. He shall also provide after sales support, on chargeable basis even after expiry of AMC, by offering AMC/up-gradation as per the requirement of purchaser.

3.1.3 The Software shall be general-purpose, suitable for any SCADA project of Indian Railways, menu driven, GUI based and fully user configurable. It should have facility for application engineering with necessary tools and library modules, so that it can be easily customized. It should be possible to customize the software to specific need of mimic and tabular displays, representation of various equipment and devices. It should be possible to create new symbols and add to this library. The online features of the application-engineering module shall allow for upgrades and modifications easily at site.

3.1.4 The architecture of the software shall be modular and it should be possible to upgrade it to the newer versions of operating systems.

3.1.5 The software shall give fast response to operator actions and system events. SCADA system stability should be sustained during event bursts. The software should be capable to support system working at high-speed data transfer rates achievable over OFC communication networks as explained in Section 4.

3.1.6 Moreover, the software/system performance should not degrade with the time as system is continuously up (due to generation of temporary files etc. which the software should be capable of cleaning/deleting automatically). The manufacturer shall endeavor to ensure no software hanging, requiring restart of system or individual computers.

3.1.7 Software data logging functions should have flexible time and event-based sampling from real time process database. All values should be registered with status/value and time stamp.

3.1.8 The software may require upgradation/reconfiguration from time to time as per purchaser's modified requirements such as adding additional DI/DO/AI points in RTU or

2337166/2023/O/o PED/TI/RDSO

6097

addition of complete RTU data. The manufacturer shall be fully responsible for this activity during warranty/AMC or after completion of AMC. Formula for costing up gradation in the same RTU & addition of complete RTU duly integrated with RCC to be evolved and the same shall be mentioned in the offer clearly.

3.1.9 Complete SCADA application software may comprise of some commercial peripheral software therefore Indian Railways shall be indemnified against claims for infringements on rights of such software and only the valid licensed copies or paper license of complete SCADA application, commercial and peripheral software shall be supplied to the purchaser/basic user.

3.1.10 SCADA vendor shall provide all necessary run time utilities for successful running of the SCADA application. The utilities supplied by the Contractor along with operating system should be sufficient to independently execute the SCADA software without any problem.

3.1.11 The SCADA servers (hardware, OS and application software) shall be hardened by way of implementing software firewalls, blocking of unused ports and media drives.

3.1.12 The password used shall have the combination of upper case, lower case, numerals and special characters.

3.1.13 All passwords shall be changed periodically. If password is not changed at the interval of six months, a pop up shall appear on MMI for changing of the password at the time of login.

3.1.14 All the unused ports and connectors in the Controllers, I/O Cards, Ethernet switches, routers, firewalls and other embedded devices shall be blocked.

3.1.15 Individual port-wise status of all Ethernet switches, routers, firewalls shall be logged in event list for link up/down events.

3.1.16 Host based IPS shall be implemented on all servers and workstations. Host based IDS shall be implemented on web server.

3.1.17 SCADA vendor shall identify and deploy software patches for OS, application software during warranty and AMC, after thorough validation at their facility. SCADA vendor shall be responsible for updates of anti-virus, firewalls, HIPS as installed in the servers/workstations.

3.1.18 Remote access facilities, i.e., access from outside of the SCADA network, shall be disabled on all servers and workstations.

3.1.19 All modifications to the SCADA database must be protected via user login. Audit trail must be available in configuration software to view the modifications carried out in the system (PC, switches, Media converter, CPU etc.) along with date time and machine name. At least following three operations must be available in Audit Trail: 1. Insertion 2. Deletion 3. Update / Modifications

3.2 FUNCTIONAL DETAILS OF MASTER STATION SOFTWARE

3.2.1 Acquisition of measurands

The SCADA system shall be capable of acquiring measurands i.e., Analog inputs from the TSS, SSP and SP. The measurand data shall be time tagged at RTU. The details of measurands are provided in Section 6. All measurands to be reported as per the setting of dead band. The dead band shall be settable to any value up to maximum measuring range of 5%.

3.2.1.1 Software shall have capability for Analogue value scaling, processing and conversion to engineering values, apart from limit settings of parameters.

3.2.1.2 Software shall be fully configurable to analyse the analogue data received from RTU e.g., energy parameters (active, reactive and apparent power & energy), voltage, current and power factor in the form of displays (graphs as well as tabular), trends, alarms to operator in case of set limit violations and historical interpretations. There shall also be facility to transfer the data to spreadsheet applications like MS-Excel in .xls formats.

If the measurands are required at a specified periodicity the same shall be configurable. The changed analogue data shall be transmitted to server for display on HMI with time tag. However, the periodic analogue data with time tag shall be updated at interval of 2 minutes with use of high speed E1 channel.

3.2.2. Acquisition of telesignals

3.2.2.1 The software shall support the acquisition of telesignals (bi-state devices) for each RTU as explained in Section-6.

3.2.2.2 There shall be dependent and independent points in the traction power supply system. For example, if a feeder CB trips, there shall be associated telesignals for catenary and 240 V ac fail. All such events must be reported by RTU to RCC with time stamp. In case of any communication failure, the last event, status, and relay fault parameters shall be downloaded from RTU locally, if required.

3.2.3 Execution of telecommands

3.2.3.1 The Software shall be capable of issuing commands to open or close a switching device. All the commands will follow select – check – execute procedure.

3.2.3.2 Operator should be able to cut off power to a sub-sector by selecting it and giving the command. The system should open all the associated switching devices automatically with confirmation for each device as an event.

3.2.3.3 There shall be option to abort a command before giving the confirmation.

3.2.3.4 All the operator commands should be logged as events. After a control command is issued by the operator, and if the same could not be executed, then a message shall be displayed indicating reason(s) for it.

3.2.3.5 The telecommand once issued, if not sent to RTU due to communication failure or otherwise, shall be aborted after a predefined period and shall not be in queue. Requisite Message in this regard should be displayed and logged.

3.2.3.6 The software shall be capable of issuing group commands to open or close the multiple switching devices.

3.2.3.7 All the close and open command of CB/Interrupter/Motorised isolator issued through MMI shall be executed through DO card provided in the RTU.

3.2.4 Parameter Downloading to RTU

The RCC software shall be capable of parameter downloading to the RTU in line with IEC 60870-5-104 & other basic standards of IEC 60870-5 series. Some configurable parameters are as under:

The RCC software shall be capable of parameter downloading to RTU.

i. Dead band settings for RBE (Report by Exception) of an Analogue value.

ii. Closed Loop Action settings for under voltage tripping

The above should be configurable through RTU's configuration file. The file can be downloaded from RCC as well as locally to the RTU with password protection.

Please refer Annexure-9 for Protocol – Diagnostic, Downloading, etc.

3.2.5 SCADA software configuration

The software should provide menu driven and user-friendly configuration. The configuration shall define the various devices, their attributes and the traction system specific details. The configuration of the software shall be carried out with the help of user/purchaser to cover all details/address/nodes of traction supply operation e.g., Interlocking, locked out signals, protection relays & elements, alarms with attributes, power blocks, parameter settings and display/picture screen properties etc.

3.2.5.1 User should be able to define complete Traction Power Supply Network in the SCADA system by means of various equipment such as CB, BM, transformers, isolators etc. The system should be able to trace the power supply network in real-time and should be able to color various sections of the network based on the power availability. Mismatch in Catenary Indication acquired from field and calculated by Network Flow Analyzer should be brought to notice of TPC via alarm / event. Sections which are currently not charged, should be displayed in white color (configurable) while charged sections must be displayed in red (configurable).

3.2.6 Time Synchronisation

The software should have the facility to synchronize the Host computer clock through GPS. Master station servers shall be time – synchronized from the GPS receiver directly while all MMI shall be time-synchronized by the Main Server over Ethernet LAN. This time synchronization shall be based on absolute time (containing year, month, day, hours, minutes, seconds, milliseconds) sent by GPS clock on a serial communication channel. It may be noted that the GPS receiver can also have LAN port for communication, which will avoid using serial ports in RCC computers. The clock of the RTUs shall be synchronized with servers as per IEC 60870-5-104 protocol.

Accurate clock Synchronization in a RTU depends on knowing the time taken to transmit a Telecontrol message to it from the central Controlling station containing the master clock time thereby permitting an allowance to be made for the transmission time during synchronization.

3.2.7 Test Procedure& Diagnostics

In general, the software shall support basic test procedure like-in-build test frames (TESTFR =act) as per 60870-5-104 & basic standards of IEC 60870-5series. The only periodic poll from the Master shall be the General Interrogation, which may be at 15 minute interval. Apart from this, Master may send a TESTFR packet at interval of 10-15 seconds if no data transfers occur between RTU and RCC to check the healthiness of the RTU and Communication media.

3.2.7.1 RTU Diagnostics

The standard features mentioned under Para 5.3.6 shall be available for online diagnostics and maintenance of the RTU using frame formats of IEC 60870-5-104 protocols.

3.2.7.2 RCC Diagnostics

SCADA application software shall have minimum following inherent features to check its own sub functions and report status to the operator:

a) Online/standby /offline state of SCADA server/communication front ends.
b) State of all RTUs.
c) State of printers.
d) Connection status of all the operator workstation.
e) Communication as well as health status of energy meter and numerical relay.
f) Status of all IP based communication equipment from RCC to RTU over SNMP (V2c/V3) protocol (if telecom equipment supports SNMP protocol).

The above diagnostics shall include the standard Windows OS tools like Windows Diagnostics, Performance monitor and Disk administrator that are provided as part of the administrator tools.

3.2.8 Communication Failures

RTU communication failure with control center shall be recorded in the event list and the same can be filtered by station/switching post. It shall be possible to generate reports on communication failure. The communication failure/restoration shall appear in MMI within 0-45 seconds.

3.2.9 System security and access levels

3.2.9.1 The system should provide at least three security levels for access for different functions with strong passwords having upper case, lower case, numerals and special characters. The login shall be name wise and the session shall auto-logout after predefined time:

a) Traction power controller (TPC): - To view and control.
b) RCC Engineer – To edit configuration information and to add TPCs.
c) System Engineer- To add new RCC Engineers and to add TPCs.

3.2.9.2 A proper Identification and Authentication Control (IAC) policy shall be adopted. Name wise identification shall be enforced with area of responsibility being defined for each user to restrict the access to specific areas based on geography or function. A Centralized User Database for this purpose shall be present.

3.2.9.3 A biometric authentication System shall also be incorporated. Biometric terminals shall be provided with each operator workstation (per TPC responsible for a section of the network). The biometric terminals shall be linked to the centralized user database at RCC level for authentication purposes. Whenever, a user performs login action on an operator workstation, in addition to username & password, the biometrics shall also be validated from the biometric terminal connected to that operator workstation. Validation of both methods, i.e., password and biometrics shall allow successful login into the workstation.

3.2.9.4 Separate logs shall be provided for the User logins in SCADA.

3.2.9.5 There shall be different User authorization levels for accessing logs and data.

3.2.9.6 Dual Redundant SCADA LAN for SCADA servers, EMS servers, workstations, etc and for connectivity with RTUs via suitable hardware/ software firewalls.

3.2.9.7 A dedicated hardware firewall shall be provided at RCC which will isolate the SCADA/EMS LAN from Railnet/Internet. Railnet/Internet connectivity provided by the Purchaser will be terminated to the firewall, and the firewall shall prevent attacks from the outside world to enter the SCADA/EMS/NMS LAN. The dedicated web server to be provided shall make available SCADA/EMS data over Web and on IEC 60870-5-104 protocol (in slave mode). The web server shall act as single point of interface between the external clients and the RCC SCADA/EMS system. The software firewall licence shall also to be provided.

3.2.9.8 The features and other details of the firewall proposed shall be approved by RDSO at the time of design drawing approval of first SCADA system developed by any vendor. The features shall be verified by RDSO at the time of type testing.

3.2.9.9 A dedicated Unidirectional Gateway shall be provided between SCADA and EMS so as to allow the flow of data only in the direction from SCADA to EMS.

3.2.9.10 UTM (Unified Threat Management) devices shall be configured to allow required traffic only. IPS shall also be configured in UTM.

3.2.9.11 Implementation of Application Whitelisting shall be considered in SCADA Servers and workstations so as to prohibit the use of unauthorized software if any.

3.2.9.12 Demilitarized Zone (DMZ) shall be properly configured as per IEC 62443-2-1 and IEC 62443-3-3.

3.2.9.13 In addition to above backup and recovery procedures shall also be well defined by SCADA vendor and purchaser shall be trained about the security threats and vulnerabilities involved in the systems.

3.2.9.14 SCADA system will provide facility of "Automatic Backup" of complete SCADA software along with historical and configuration data to a "Network Attached Storage" (NAS). The backups stored on the NAS shall be encrypted so that information retrieval from the backup is not possible. Last two backups should be available at all times and older backups should be deleted automatically. A dedicated NAS should be supplied at RCC with the following specifications:

- Dual 10/100 Ethernet Ports
- 4TB SAS/SATA drives configured in RAID 1. It should be possible to restore SCADA system to the last point of backup available on NAS. The restore procedure shall verify the authenticity and integrity of the backup before restoration.

3.2.9.15 Remote location backup shall be provided at suitable location within RCC except server room for recovery in case of Disaster related Emergencies. This shall be achieved by automatic backup of data in NAS (Network attached storage).

3.2.10 Manual Input:

Facility for marking (Manual input) shall be provided for any alarms, equipment status including manually operated isolators, measurands and limit-settings, through keyboard.

3.2.11 Status Information:

Details like device name, current value/status, scans status (on/off scan), override status and block status shall be displayed.

3.2.12 Block/De-block of RTU & control for devices:

Facility shall be provided to block / de-block a control point (Circuit Breaker, interrupter and other controllable equipment at the controlled station) which disables/enables control operations from the RCC. Facility should also be provided to block/ de-block of RTU. The blocked condition of any equipment shall be suitably indicated on the monitor.

3.2.13 Boundary post operation:

When a post separates the zones controlled by two adjacent RCCs, control of breakers/interrupters at this post will be so arranged that the breakers/interrupters can be closed by one RCC only when an interlock is released from the other RCC. However, opening shall be possible from any of the RCC. The boundary post details shall be furnished by the purchaser.

3.2.14 Alarm Processing and displays:

3.2.14.1 Alarms should be generated as per the configuration of the software i.e., whenever the state of the device is found to be in the abnormal condition or any measurand's set limit is violated. In the event of failure of RTU or any equipment at RCC such as Host or MMI an equipment alarm should appear. When both the auxiliary contacts of a device are either in open or in closed condition, such faults shall be detected and identified as "Complementary Faults". Such conditions shall also get logged in Alarm and event list.

3.2.14.2 The alarm list shall be of two kinds – current and historic.

i. ***Current alarm list*** should contain minimum 400 entries. The list will be ordered chronologically. Acknowledgement status of an alarm shall also be indicated in the current alarm list.

ii. ***Historical alarms list*** shall consist of alarms for the last one month.

3.2.14.3 Operator shall be able to request for display of the alarms in chronological order starting from any given time. Provision for sorting of Historic Alarms on various options such as station-wise, tag wise, and in chronological order should be supported. Alarm list should be printable on user's request.

3.2.14.4 For CB tripping's, in addition to events/alarm list, a separate popup window shall be opened on the operator screen in a dedicated area with details of relays, reactance, resistance & current values or V, I, Phase angles or distance or Z and its angle, only if it is available from the field relay through RTU. It should be closed on acknowledgement by TPC.

3.2.14.5 **Alarm acknowledgement**

i. Page wise facility for alarm acknowledgement or acknowledgement of all alarm with a single click should also be provided in addition to one-by-one acknowledgement.

ii. There should be facility to define certain alarms with audible sound or pre-recorded voice to attract the attention of the operator as per user requirement.

iii. There shall also be facility for time delayed alarm operation e.g., alarm for Tripped Capacitor Bank CB closing reminder.

iv. There shall also be facility for pop up alarm on operator screen in a dedicated area for overloading of particular feeder. Period of overloading should warn the TPC.

3.2.15 Events display

i. Events shall be logged for all commanded and un-commanded changes in equipment status, acknowledgement of alarms, limit violations of analogue points, user login and markings done by operator from MMI.

ii. The event list shall also be of two kinds – current and historic, same as explained in alarms in Para above and similar options for sorting, displaying and printing of event reports shall also be available.

3.2.16 Power Block

i. Power Block is given for maintenance by de-energising the device/ section of OHE. When a device/section is under power block, it shall not be possible to operate/charge it, unless the power block is first cancelled from the RCC. In case a telecommand is attempted, a failure message shall be given to the operator.

ii. **Granting the power block**

a) The software shall have facility to select the device/section to be under power block.

b) It shall also be possible to select a number of CBs/BMs required to be operated for making a section dead and a group command shall be possible

to issue. The system shall open all devices, which are put under power block by the operator. The operation must be confirmed for each device as an event.

c) Operator should be able to cut off power to a sub-sector by selecting it and giving the command. The system should open all the associated switching devices automatically with confirmation for each device as an event.

d) The operator shall have to enter the details of the power block like the operator's code number, and time duration of power block. All power block details like operator's identity, time of imposition and section shall be recorded along with system time.

iii. **Cancelling the power block:**

a) Operator shall select the device or the section on which the block has to be cancelled and give power block cancellation command. With this the power block of the devices/section shall be removed.

b) If a power block is not cancelled at the end of the permitted duration, a suitable alarm shall be generated to attract the attention of the operator. System should permit the operator to extend the power block period in confirmation to this alarm.

iv. It shall be possible to display or print the information of all power block details giving clear details regarding operator's identity, time of imposition and also the system time. Power block details shall also be stored in the database for later use.

v. There should be a provision for entry of power block as per Annexure-10. Menu should be made in which details of timing of PB imposition and cancellation, work carried out, person incharge, working KM etc. can be filled and the same should be tabulated automatically in a separate folder in server itself. The saved data shall be retrievable for any future reference.

vi. There should be facility to issue power block for an open equipment also.

vii. The pop up should not block the view of the TPC in OWS.

3.2.17 Under-voltage tripping of SP Bridging interrupters:

Under extended feed conditions, if a low voltage at SP persists for more than a specified time (both of these shall be configurable), an alarm shall be sent to the operator. If the voltage continues to be in the low range even after this time (i.e. operator has not taken any action within specified time to restore normalcy) then the bridging device shall be opened by a RTU through close loop action.

The RTU shall monitor voltage levels at both sides of the SP & if the voltage is low for a specified period of time, it shall give a trip command.

There should be also a manual option from SCADA to bypass the condition in the event of PT physical failure at SP with specific permission to CTPC/SSE/RC.

3.2.18 Automatic Fault Localization of OHE (AFLN)

This feature of automatic fault localization of OHE faults by the SCADA system is required in cases where the SSP/SP/ATP are not provided with Circuit Breaker along with its associated numerical relays.

The software supports automatic localization of faults in OHE, segregation of faulty sub-sector/broken sub-sector and restoration of 25 kV power to healthy sections of OHE. The fault localization process can be initiated by the operator through the MMI screens.

The method of invoking the function is given in the section–operator commands. If the SP BM is closed at the time of initiation of fault localization, the software assumes it as an extended feed condition and proceeds accordingly. The software shall analyze the network state at the time of initiation of AFL, and automatically test and verify all sub-sectors that were being fed by the circuit breaker. The software employs the technique of energizing all the sub-sectors/broken sub-sectors sequentially and identifying the faulty sub-sector/broken sub-sector by checking the tripping of the feeder circuit breaker for each of the energizing operation. The software will ensure the following during the fault localization and isolation process.

- ***Take into account the following inputs entered by the operator.***
  a. *Power block imposed/ cancelled on an interrupter*: Whenever power block is imposed on any of the interrupter, no further control on that interrupter will be possible from the master station. For the purpose of fault localization such interrupters shall be assumed as "open".
  b. Discontinuity caused in any sub-sector due to imposition of power block on an elementary section of that sub-sector. Ensure that no interrupter that was open prior to the occurrence of fault is closed during the fault localisation process.
  c. If any device in the sub-sector is overridden, a message is given to the operator and the AFL is aborted. The message will be "Disable the overridden values in the sub-sector and re-start AFL".
- ***Segregate the fault by opening minimum number of interrupters.***

  Feedback for commands issued by AFL, and checking of FCB tripping during AFL shall be prioritized.

  The AFL can be done for

  a. Normal case of the sector from TSS to SP
  b. Extended case for sectors up to the next failed TSS
  c. Extended case for sectors up to the SP after the failed TSS

The AFL algorithm shall automatically determine the present case from one of the cases defined above, and proceed with suitable sequence of operations. Further, the algorithm shall be self-adapting to different network topologies like single line, double line, three line, bus-bar arrangement at SP/SSP, etc.

In case of FCB tripping second time and the auto re-closure locked out telesignal is received, it shall be possible to automatically initiate AFL without operator intervention. This feature shall be configurable on FCB basis. When the fault localization is on, the progress can be seen using the displays where the corresponding sub-sector is defined. The display will be same as the normal station display. Operator will be able to see the latest status of the devices operated by AFL and can thus trace the progress of the AFL. There will be no alarms for the devices, which are operated by the AFL. The operator can abort the AFL while it is in progress. The sequence of operations as carried out by AFL shall be recorded in the event list for later analysis.

An alarm is raised after the fault localization is completed. The alarm will indicate the faulty section. After identifying the faulty section, the AFL algorithm shall automatically block that faulty section, and restore the other sections to their original state. There shall be an option to automatically isolate sections parallel to the faulty section, as there could be trains in the section parallel to the faulty section.

In case AFL could not locate any fault, then an alarm indicating the same shall be generated, and all the sections being fed by the FCB should be restored to their original

state. In case AFL aborts due to any error during its execution, an appropriate alarm shall be generated indicating the reason for abortion of AFL.

3.2.19 Inputs to the AFL algorithm: A user interface for defining the power supply network being fed by each FCB shall be provided. This will provide the required inputs to the AFL algorithm to determine the sections to test when AFL is initiated for that FCB. Once the sections are defined, the AFL shall automatically determine the current conditions of the power supply network, and proceed accordingly.

There shall be a single algorithm that operates for all conditions and that which requires the minimum of inputs from the user during engineering, and during initiation of AFL or AFL algorithm shall be configured individually for each FCB using a user-friendly user interface.

3.2.20 Disturbance Records: The protection relays installed may have communication features compatible to IEC 60870-5-103 or IEC 61850. The fault waveform data stored in the relays at TSS/SSP/SP shall be required to send to Remote Control Centre through SCADA. Necessary configuration tools for fetching the stored data in the relays and analysis of the fault waves thereof shall be integrated part of the SCADA software. In IEC 60870-5-103, Disturbance Recorder is available using request of Frame Type 24 & 25 or as per IEC 61850. Refer section 7.4.11.2 (Transmission of disturbance data) of IEC 60870-5-104 standard for details of communication between RTU & RCC or transfer of Disturbance Data in form of COMTRADE file or Relay's Native File Format using IEC 60870-5-104 section no. 7.4.11.1 using "Name of File" as <1> shall be applicable.

3.2.21 Printers: The SCADA software shall support a minimum of two data-logging laser printers connected on LAN.

3.2.22 Message pad: One page shall be provided for the operator to record/add important messages. They can also be edited and removed by the operator. The messages will be retained by the system even if the MMI is shutdown. When it is brought up again, the last entered message shall be viewable by the operator. The messages entered in hot system shall be automatically replicated to Standby system when SCADA failover takes place.

There shall also be a facility to put "REMARKS "notes on MIMIC to any Equipment, Parameters, and interconnections.

3.2.23 Data logging and Reports generation

All alarms and events shall be logged by the system. Average values of selected analog parameters may also be stored. The duration of this logging should be settable and Log data should be stored automatically with date (year, month and day) and time (hours and minutes) stamp in a file. The software should be capable of generating different types of reports. The reports generated shall be digitally signed by SCADA Software to ensure authenticity of the report source. Some of the reports which may be required are: -

i. Duration during the month when the voltage went above or below 27 or 17 KV at the TSS and SP respectively.
ii. Duration during the month when the current is exceeding full load capacity of the transformer.
iii. Energy data interpretation, MD violation.
iv. Report in standard format as per Annexure-11.

3.2.24 Voltage profile at TSS, SSP, SP& ATP:

Recording of Voltage Profile at TSS, SSP, SP & ATP shall be done and stored in the SCADA or EMS. Minimum duration for monitoring shall be 48 hours. The voltage

parameter shall be recorded when voltage is below 19 kV and above 28 kV. Voltage between 19 kV and 28 kV shall be considered as normal and hence no recording requires. It shall be possible to display these values in form of Graph and Tabular report as and when required. Filtering of voltage profile data shall be done by date and time. It shall be possible to read from Voltage-Time graph the time and duration of low/high voltage along with values.

3.2.25 Help functions:

On-line help and tutoring guide should be provided for all major functions in the MMI using the HELP option. The help sections will guide the operator for any specific help for carrying out certain tasks.

3.2.26 Tabular displays, Current & Historical trends diagrams/graphs:

3.2.26.1 The software shall be capable of providing tabular Display of data of a controlled station e.g., equipment status, alarms and measurands.

3.2.26.2 The time versus value plot of measurands in a separate color including the arithmetic values on the measurands such as multiplication shall be displayed in a trend diagram.

3.2.26.3 The trending shall include both historical trending and dynamic trending of current data. The dynamic (current values) trending shall be for duration of one hour. For Historical trend, average value of data shall be logged at the interval of 5mts duration.

3.2.26.4 Logging of voltage profile at SP/SSP should be at an interval of 10 seconds and data should be stored in RTU for initial 1 hour.

3.2.26.5 Generation of reports for down time of servers.

3.2.27 Failover of dual hot-standby systems

3.2.27.1 Hot standby systems shall be designed to improve the reliability of SCADA system by having back-up machines that automatically takes over when the primary fails. The standby systems for the main server shall ensure that there will be no loss of data, alarms, event etc. due to the failure of primary server and data shall be updated normally after the failure occurs. In the event of failure of primary server, the stand by server computer system automatically takes over including the data acquisition and the communication with RTUs over the existing channels. The Changeover from Hot to standby computer shall not take more than 60s from main to standby. The failure of primary server shall be displayed on all MMI's along with suitable alarm indication.

3.2.27.2 The system shall also support dual Ethernet LAN wherein each computer shall have two LAN interfaces. From each computer, one LAN interface will be connected to first network switch and the second interface to the other switch. After achieving this connectivity, it shall be ensured that any failure of one LAN interface of computer, any one LAN wire, any one LAN switch should not cause permanent break in LAN connection between any two machines. In any such condition, the system should be able to restore alternate LAN route within 30 seconds, also none of the equipment should be declared offline/disconnected during LAN failure.

3.3 Overall screen design & real time display

The MMI screen developed on WINDOWS shall generally comprise of Title bar, Menu bar, tool bars, status bars etc. for real time depiction & control of traction power system. This interface shall provide for all interactions between the operator and the SCADA system. It shall also have features for alerting the operator with audio/visual supports on occurrence of critical alarms and events. The audio alarms shall include play back of pre-recorded voice files in '.wav' or any other standard formats.

3.3.1 Full graphic, colored displays of controlled stations shall be provided by the software. The display shall include ON/OFF status of equipment, (such as feeder CB trip, AC and DC fail/low, RTU fail, communication fail, machine down etc.), alarms, measurands and names of the controlled stations.

3.3.2 There shall be facility for viewing display of full section, suitably condensed to fit screen size. This condensed picture shall be displayed on the MMI when called by the operator. Condensed diagram may have fewer details as compared to the normal display but operator shall be able to control any of the devices and accept / acknowledge any alarm.

If number of controlled stations is too large then the condensed picture for full section may be displayed on two or three pages.

3.3.3 Alarms for circuit breaker(s) tripping(s) shall be displayed on MMI screen in addition to flickering of circuit breaker symbol(s) till operator acknowledges the same. The telecom and points like CBs, Interrupters etc. shall be displayed with the distinct color schemes & attributes e.g.

- Point blocked from control - distinct color
- Alarm state - Blinking with distinct color
- Alarm state and acknowledged - with distinct color
- Point has complementary fault - distinct color
- Point value non-current since the RTU is down. - Distinct color

Similarly, all telemetered points like V, I, power/energy parameters etc. shall be displayed with the distinct color scheme & attributes e.g.

- Alarm state - distinct color
- Normal- distinct color
- Non-current - If due to any reason, RTU stops to communicate with RCC at any time but MMI shows the measurand which was updated in the MMI previously so the value displayed presently is not the current value same shall be treated as non-current.

3.3.3.1 In addition of above the SCADA software shall be fully capable/ configurable of showing different alarm states and their acknowledgement in a distinct color and display attribute like blinking etc.

3.3.3.2 The software shall be capable to provide tabular display of data of any controlled station e.g., equipment status, alarms and measurands. It shall also be capable of generation of current trend diagrams (the time versus value plot) of single or multiple measurands.

3.4 Efficient and Quick Fault Finding Simulation Software for TPC Personnel (SCADA training module)

SCADA manufacturer shall develop and provide Efficient and Quick Fault Finding Simulation Software designed for providing training to Traction Power Controller. The mimic shall be the replica of running SCADA system for easy understanding. The purpose of the software is to erase the knowledge gap and to enhance the knowledge of TPC to isolate faulty sub-sector from healthy section at the time of occurrence of fault efficiently, smoothly and quickly. Fault shall be created through simulation software and there shall be provision to segregate the faulty section manually by the trainee 'TPC' as per the procedure mentioned in ACTM. After segregating the faulty section, TPC should charge the healthy section. The time taken by the TPC should be counted by the software from the beginning till the healthy section is charged by localizing/segregating the fault. The following functions shall be available for Efficient and Quick Fault Finding Simulation Software for TPC Personnel:

- The software shall be capable of creating the fault manually as well as automatically in the selected sub-sector.
- The software shall support segregation of fault manually by switching ON/OFF the Circuit Breakers/ Interrupters.
- Manual fault localization logic as implemented in the SCADA Software shall be implemented in the training software to assess the time taken by the trainee TPC for segregation of Fault and charging the healthy section.
- The mimic shall be same as SCADA System supplied for that particular section. Further, the software shall be capable to add sections which shall be subsequently electrified.
- The software shall have feature for name wise login and logout with proper history of number of attempts on the software to localize the fault. The status of whether the fault was successfully localized or not along with the time taken to localize the fault shall be available in historical data. Further, it shall be capable of recording parameters like fault initiation time, total time taken for fault localization, events of opening & closing of CB/BM to localize the fault with time and date stamping.

  In case of addition of new sections, the changes required in the software for that particular section shall be integrated. Further, the system used for Simulation Software shall be a standalone system and shall consist of one PC with CPU and other accessories. Only a single set of standalone system shall be provided at RCC for this purpose & shall be mentioned in the tender document accordingly. The specification of PC & CPU shall be as below:

Item	**Description**
Brand / Make	Any reputed make
Type of Processor	Intel core i5 with 12th or higher generation
RAM size	Minimum 8GB DDR4
Hard disk	1 TB SSD
Multimedia with accessory	In-built speakers
Display	Minimum 42" Full HD LED Backlit Anti- glare IPS display
Screen Resolution	Minimum 1920*1080 pixel
Number of ports	USB: Minimum Three, Ethernet port: Minimum 1, HDMI:1
Accessories	With external 220 V AC 50Hz power supply adapter.
Operating System	MS Windows 10 or higher.
OS & System Architecture	64 bit

SECTION 4

COMMUNICATION MEDIUM

4.0 Telecom Arrangement for High speed TCP/IP based SCADA

4.1 S&T wing of Railway shall provide, maintain and replace communication media and all telecom equipments installed for extending data communication by providing end to end telecom connectivity (from RCC to Remote Terminal Unit (RTU) at switching post for SCADA system.

4.2 S&T wing of Railway shall provide redundant high speed communication medium between RCC & Station Hut through STM-1/MPLS equipment connected in a ring. The purchaser shall provide all technical details of the communication media offered for SCADA. The communication link up to RTU shall be provided by the S&T wing of Railway which shall not be redundant one.

4.3 S&T wing of Railway shall arrange communication medium between RCC and RTU. For this purpose, existing OFC network shall be used between RCC & way station nearest to RTU locations. OFC has been laid along the track and terminated generally in OFC huts at way stations. These OFC huts house STM/MPLS equipment configuration enabling extension of E1 to way stations. Presently the connectivity from OFC hut to RTU locations is mostly on copper cable. If the connectivity between the S&T OFC hut and switching posts is provided with OFC then single mode fiber cable should be used. All new TSS, OFC connectivity shall be provided between OFC hut and RTU by S&T wing of railway. S&T wing shall provide redundant communication medium between RCC & OFC station Hut through STM-1/MPLS equipment connected in a ring and OFC hut to switching station by providing spare channel. The purchaser shall provide all technical details of the communication media offered for SCADA.

In case of OFC telecom media upto switching post & RTU, S&T shall provide 100BaseFX (Fiber Connectivity) at switching post and RCC. In case of quad media (copper cable) between OFC hut and switching post, and at RCC, S&T shall provide Ethernet connectivity at switching post and RCC. All equipment provided by S&T shall support the SNMP V2C / SNMP V3 protocol. Network provided by S&T should provide the SCADA vendor the freedom to choose the IP subnets. No firewalling shall be implemented by the Purchaser on the provided network. Guaranteed bandwidth of 128kbps min. per RTU shall be ensured by the Purchaser.

4.4 The communication setup for implementing high speed communication is achieved through use of Router with an inbuilt 2-port E1 interface card, LAN extender/Media converter/2Mbps digital Modem etc. In this arrangement one E1 shall be provided between stations to station. For network redundancy, additional E1 is utilized to form an OFC ring from station to station.

4.5 The telecom scheme is depicted in the diagram given below.

Telecom scheme comprises of Router with E1 interface, 2MbPS Digital Modem/Media Converter/LAN extender etc. powered by available 48 V DC in OFC Hut, 240 V AC in RCC and 110V DC at switching post.

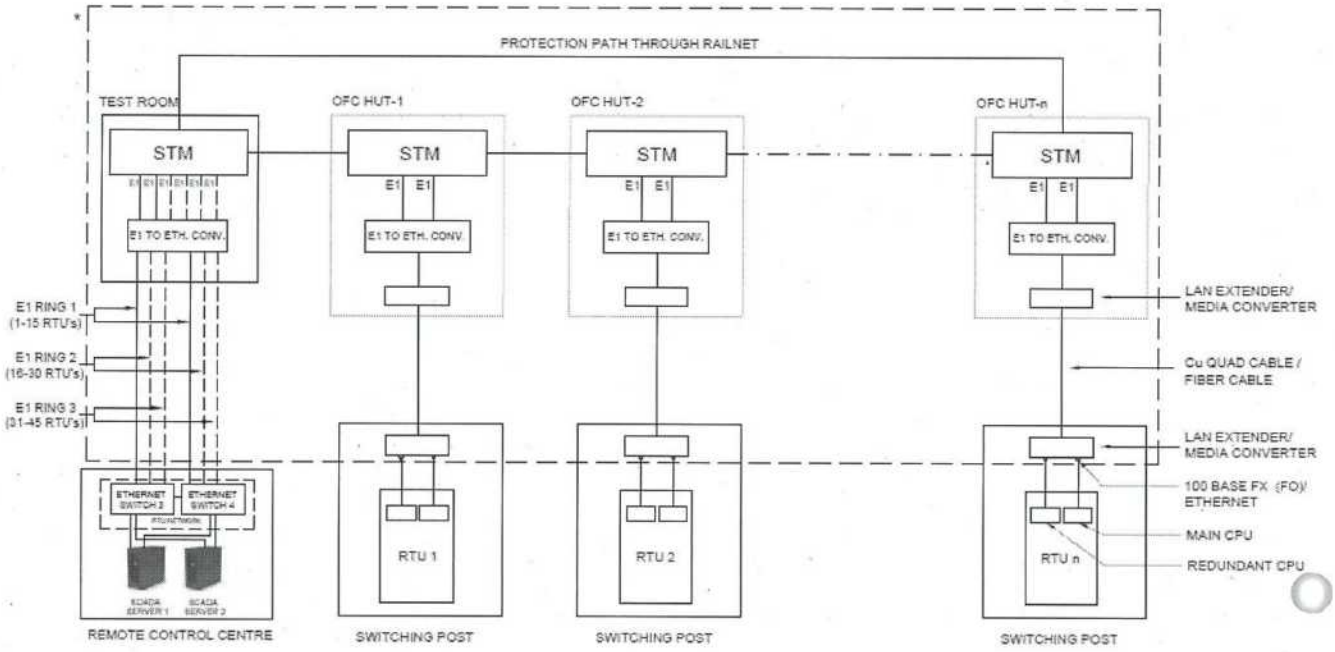

Note : 1. * The Routers, Converters and telecom media with provision of LAN extenders or media converters shall be provided and maintained by S&T wing of railway.However the IP's for the same shall be defined by the manufacturers at the time of erection/comissioning.

Figure: Telecom scheme for high speed SCADA based on TCP/IP communication

In this scheme availability of E1 channel is required at each OFC HUT at way stations and at Divisional HQ OFC Room. S&T wing of Railway shall provide necessary E1 channel and telecom equipments.

4.6 The S&T wing of Railway shall have to ensure the availability of E1 channel, telecom equipments and medium of communication. The scheme of communication comprises of the following:

a. 2 E1 made available by S & T from STM at OFC Hut and 2 E1/MPLS at the division. 2 E1 at Division shall be required for making ring to make the communication redundant whereas 2E1 at post shall be required for communication for the post as well to connect next post. Last post second E1 may be through other OFC network to make the ring by connecting RCC/STM at Division.

b. Router/ CTC Converter or equivalent with minimum 2-port T1/E1 Multiflex Trunk Voice/WAN Interface Card).

c. 2MbPS Digital Modem/Media Converter/LAN extender at OFC Hut

d. 2MbPS Digital Modem/Media Converter/LAN extender at post

Note: *For clause no. 4.1, 4.2, 4.4 & 4.5, the redundant communication medium between RCC & station Hut through STM-1/MPLS equipment connected in a ring is not mandatory for the section where OFC work is in progress or branch line / spur link. The requirement of redundant communication for such section shall be decided between PCEE & PCSTE jointly. Whenever, redundant communication available in such section, the SCADA system shall be switched over to redundant communication immediately.*

4.7 In case OFC is provided between Station Hut & Switching Post, 2MbPS Digital Modem/ LAN extender shall be replaced by suitable media converter on both ends (Ethernet on copper to Ethernet on fiber.

SECTION 5

REMOTE STATION EQUIPMENT

5.1 INTRODUCTION

The Remote Terminal Unit (RTU) shall be installed at TSS/SP/SSP/ATP to acquire data from power system devices i.e. CT/PT circuits, numerical relays and device status signals. RTU shall also be used for control of devices from Master station/RCC. The supplied RTUs shall be interfaced with the substation/switching post equipment, communication equipment, power supply distribution boards; for which all the interface cables, TBs, wires, lugs, glands etc. shall be supplied, installed & terminated by the successful manufacturer.

The RTU's & other equipment are subjected to severe temperature variations and vibration conditions then the RCC equipment. Manufacturer shall take care of these aspects in his design. The prototype design of the RTU shall be approved by RDSO.

5.1.1 The RTU Hardware shall include redundant CPU modules, it's associated digital input/output modules, alarm input modules, analogue input modules, watchdog, transducers, memory, interposing contactors, redundant power supply units and surge arresters and other items necessary for its proper functioning. In case of failure of CPU/PSU the redundant module will take care without interrupting the functionality of SCADA, and an alarm for the failed module shall be generated in the RCC and logged as event also. RTU shall have feature to monitor status of all IEDs connected to it from RCC. RTU shall be compatible to work with any make of master (SCADA server).

The redundant CPU shall have capability of synchronizing their states in order to maintain the most recent copy of the process state such as, I/O states, SoE in both CPUs. In the event of a switchover of CPUs, the newly promoted active CPU should have the most recent state, as was before the switchover.

5.2 PHYSICAL CONSTRUCTION OF RTU's

5.2.1 The RTU cabinets shall be dust, rodent and vermin proof with doors. The doors shall have proper rubber gaskets & locking arrangement. The cabinets shall have facility for bottom entry of incoming/outgoing cables for operation of the equipment. Suitable reinforcements shall be provided wherever necessary. The RTU shall have cabinets made of CRCA sheets with powder coating. All panels shall be in-door, and meet IP 51 class of protection.

5.2.2 The RTU for TSS/SSP/SP/ATP shall be floor mounted and every endeavor shall be made by the manufacturer to offer as small a cabinet as possible without compromising on maintainability and serviceability of the RTU equipment. There shall preferably be only one RTU cabinet housing all equipment. All enclosures shall conform to minimum protection class IP 51 as per IEC 60529. The interior of the panel shall be lighted using an 8 W LED Bulb/Tube by a door-controlled switch for maintenance purposes.

Vendors should explore possibility to design a single RTU for TSS/SSP/SP/ATP irrespective of usage in 25kV, or 2x25kV or Sub-urban Traction System.

5.2.3 Modular type of construction shall be adopted to facilitate unit replacement of devices wherever required and must be scalable to cater TSS/SSP/SP with up to 4 lines. Surface mounted technology (SMT) shall be used for higher level of reliability. Standard plug-in and connector arrangement shall be made for the printed cards.

5.2.4 All electronic modules shall be mounted vertically and fixed on the main frame of the cabinets. The RTU housing internal design shall be according to isolation needs and

space restrictions therefore minimum possible size racks with integrated terminals shall be used for reducing the wiring. RTU shall be compact expandable and scalable to cater TSS/SSP/SP with up to 4 lines. Suitable check points/ diagnostic indications shall be provided on the cards for monitoring its healthiness.

5.2.5 All internal RTU control circuits and wiring of DI/DO & other signal circuits between C & R panel and RTU shall be with 0.75 sq mm, 1100 V AC/ 1500V DC grade PVC insulated copper conductors conforming to IS 694. The wires used in RTU for DI, DO and AI circuit shall be of different colors.

5.2.5.1 RTU shall be wired with 1.5 sq. mm PVC insulated armoured copper conductors conforming to IS: 1554, Part-I, 1100V AC/ 1500V DC grade for interconnection between RTU & Control & Relay Panel and incoming 110V DC & 240 V AC power supply. For CT wiring, 4sqmm conductor size shall be used. Suitable metallic double compression cable gland shall be used for inserting the cable in RTU & CRP.

5.2.5.2 The bunch of wires/cables shall be neatly dressed, laid in plastic trays and supported suitably. Separate wire bunches shall be run for AC, DC, control and data circuits. Caution plates& name labels shall be provided, wherever necessary.

5.2.6 Proper protection by providing MCB's conforming to IEC 60898-2 of any reputed make to different supply circuits shall be ensured inside the RTU.

5.3 RTU FUNCTIONAL DETAILS

5.3.1 The RTU shall be designed for handling telecommands, telesignals and telemetered parameters as per the details given in this specification. All the changes (one or more) in the status of the circuit breakers / interrupters /motor-operated isolators and alarms that may occur between consecutive polling shall be stored by the RTU until they are reported to the master stations along with their time of occurrence. Moreover, a minimum of 10000 events shall be stored in the RTU memory sequentially, in case of communication failure, for reporting to the master station. The events should also be stored in non-volatile memory so that these can be transferred to RCC even if the RTU is power cycled or communication restores after failure.

5.3.2 RTU shall use IEC 60870-5-104 protocol for communication with RCC. The RTU shall be configurable to report analogue & status changes by exception to RCC. However, RTU shall also support periodic reporting of analogue data and periodicity shall be configurable from 1 sec to 15 minutes. The dead-band for reporting Analogue value by exception shall be settable from 1% to 10% of the maximum measuring range. In addition, analogue values shall also be reported to Master station by exception on violation of a defined threshold limit. The threshold values are to be configured in the RTU so that any sudden variation in analogue value, like crossing a limit, or a significant change in the value is reported spontaneously to SCADA.

5.3.3 RTU shall support Maximum Demand (Apparent power) calculation based on inputs received from energy/power transducers or acquire Maximum Demand (Apparent power) value from energy meter (MFM/ABT meter) based on 5 to 60 minutes (configurable) window periods. The instantaneous and window values shall both be available from the RTU. The instantaneous value shall be reported as per cyclicity of analog value reporting. The value of MD shall be reported to RCC after each window period along with time stamp.

5.3.3.1 Energy meter on HV/LV side provided at TSS can be used for acquiring Energy Parameters value by interfacing with RTU through RS485 over MODBUS protocol. There shall be provision of correction factor in the SCADA software required for matching the MD. It may be multiplying factor or addition/subtraction of any value

based on the difference observed. Location of CT/PT may not be same for EB and TSS meters.

5.3.4 The CPU will restore without any manual intervention after restoration of power failure or communication failure or internal fault. All restarts shall be reported to RCC over the IEC 60870-5-104 protocol.

5.3.5 RTU shall be capable of being reconfigured (under password control) locally from the laptop/portable programming device and from the Central Master Station by using RTU Maintenance Software. SCADA manufacturer shall furnish authentic copies of RTU firmware in CD/DVD to the purchaser. Document regarding File formats shall be submitted along with design/ drawings of SCADA to RDSO for approval.

5.3.6 The RTU shall have self-monitoring/diagnostic for fault conditions. This shall provide various details such as, defective cards I/O cards, host lines, device status, command supervision etc. The RTU should generally support the test procedures as per standard protocol IEC 60870-5-104. SCADA vendor shall submit the details of specific diagnostic function to RDSO at the time of design document and drawing approval. The RTU shall also support SNMP protocol to allow monitoring of the RTU modules and other diagnostic information from a Network Management System.

5.3.7 RTU shall be capable of locally implementing miscellaneous traction power control and protection needs e.g.

i. Interlock release-request facility for circuit breakers/ interrupters control at boundary post.

ii. Tripping of CB/BM on under voltage at SP after a set time delay.

5.3.8 RTU ARCHITECTURE- TECHNICAL DETAILS

CPU	
Processor	32 bit or as approved in design
RAM	256 MB (Min.) or as per design requirement higher than 256MB
Non-Volatile Memory	4 GB (Min.) or as per design requirement higher than 4 GB
Internal Watchdog	Available
Reset Switch	Available
Clock	Internal RTC</= 50 ppm accuracy) or better
Communication Ports	Min 1 number RS-232/USB Port, 6 nos. RS-485 ports for communication with Numerical Protection Relays on IEC 60870-5-103 protocol & with NIFPES, Multi-Function Meters/Energy meter, anemometer, PQR, Battery charger, Digital surge counter, Burglar Alarm etc. on MODBUS protocol and 2 numbers Ethernet port for communication with numerical relays etc. on IEC 61850 protocol. Minimum 2 nos. of Ethernet ports for communicating with the RCC as per IEC 60870-5-104 protocol. Alternatively, a separate communication module (card) in redundant mode can also be provided for various communication

2337166/2023/O/o PED/TI/RDSO

6114

	ports mentioned above. -The RTU shall support data transfer from protection relays as per IEC 60870-5-103 & NIFPES, multifunction meter/energy meter, anemometer, PQR, battery charger, Digital surge counter, Burglar Alarm etc. as per MODBUS protocol using RS-485 ports and IEC 61850 (edition 1 and 2) protocol using Ethernet ports. All I/Os that are available with relay (i.e.– Protection alarms, Catenary Status, measurand etc.) should not be hard-wired & should be read from relays wherever possible. Only in exceptional case, where the Relays are non-communicable, the protection alarms measured may be hard wired. The control and status of CBs, Interrupters and motorised isolators shall be hard- wired with DO/DI card. -Communication ports should be optically isolated
Operating System, firmware	Real-time (RTOS)or embedded Linux or others meeting RTU functional requirements
Diagnostic LEDs	Available
Digital Input Card	
General	-The RTU shall be capable of capturing contact operations of 20 ms or more duration. Operations of less than 20 ms duration shall be considered no change (contact bounce condition). -The RTU shall be capable of accepting two types of status inputs i.e. Single point Status inputs and Double point status inputs. -All status inputs shall be time stamped by the RTU with an accuracy of 1 ms. - Relays/optical isolation for inputs shall be provided.
No. of channels	As per section 6.
Voltage sensing	110V DC (either directly or through interface cards)
Isolation	User input to channel: minimum 1500V AC for 1 minute
Protection	Voltage surge protection per channel (inbuilt / external)
LEDs	ON/OFF LEDs per channel & power/ healthiness of the module or suitable diagnostic tools shall be implemented in RTU software tool to check the healthiness of each channel whenever required.
Channel scanning period	1ms
Debounce filtering	To be supported
Anti-chatter	To be supported

algorithm	
Digital Output Card	
General	On receipt of command from master station using the select check-before-execute operate (SCBO) sequence; the appropriate control output shall be operated for a pre-set time period which shall be adjustable. No. of Channel/Capacity: As per section 6.
Output Characteristics	Each DO channel to have sufficient current/voltage rating to operate the contactor coils.
Pulse durations	100-2500 ms, latched outputs
Isolation	User input to channel; minimum 1500VAC for 1 minute
LEDs	ON/OFF LEDs per channel & Power/ healthiness of the module or suitable diagnostic tools shall be implemented in RTU software tool to check the healthiness of each channel whenever required.
Analog input card	AI card to be used for PT, CT, RTCC inputs i.e., OTI, WTI and Transformer Tap Position (for online tap changer) inputs (with suitable transducer).
Number of channels	As per section 6.
A/D converter	The analog input shall support measuring of CT, PT voltages up to 110% of nominal value without loss in accuracy, RTCC input, transformer tap position. A 16-bit A/D converter should be used.
	All analogue value shall be time stamped by the RTU with resolution of 1 ms.
Isolation	User input to channel; 1500VAC for 1 minute
Protection	Surge protection through MOV per channel (inbuilt / external). Current limiting to be provided, Resettable fuses for each channel for overload protection.
LEDs	ON/OFF LEDs per channel & Power/ healthiness of the module or suitable diagnostic tools shall be implemented in RTU software tool to check the healthiness of each channel whenever required.
Accuracy	0.1% (or better) of full scale.

Vendor should submit the details of above i.e., Processor, RAM, Non-volatile memory etc. in bill of material at the time of design drawing approval.

5.3.9 The RTU address shall be configurable. The RTU address should not be lost in case of power swings or surges. It shall be possible for the purchaser to reconfigure the address for the remote station. (The manufacturer shall train the purchaser in the setting, configuring of the RTU's.)

5.3.10 It shall be possible to configure and record selected set of analog parameters at a resolution of 1 second. This function once enabled shall function continuously, and provide automatic retrieval at RCC of the recorded data. The data transfer can take place in buffered fashion, such that normal functions are not affected.

5.3.11 Time accuracy of RTU time stamp shall be 1ms. A separate test to certify this would be specified.

5.3.12 The RTU shall support communication with at least 4 master stations simultaneously using IEC 60870-5-104 protocol using separate logical databases for each master station. At boundary post locations, it shall be possible to use a single RTU to report to both RCCs.

5.3.13 The RTU shall support SNTP server feature in order to synchronize the clock of the relays. The SNTP server shall report time of the RTU's internal clock, which in turn is being synchronized by RCC SCADA over IEC 60870-5-104 protocol.

5.3.14 The RTU shall also have IEC 60870-5-104 protocol support for interfacing with automatic fault locator (AFL) equipment (if provided) that may be installed in 2x25kV network. The RTU shall acquire the fault data such as location, health status of AFL equipment over this interface, and update the same at RCC SCADA.

5.3.15 All switching station CPU, Power Supply, DI, DO, AI, and any other module required for functioning of the RTU shall be interchangeable with changing the address to use the CPU at other RTU in case of failure and non-availability of spare CPU to restore the important RTU (like TSS and SP).

5.3.16 All I/O modules of the RTU shall be hot-swappable, to allow ease of maintenance, troubleshooting, and reduce the need for shutting down the entire RTU during such activities.

5.4 POWER SUPPLY UNITS (PSUs)

5.4.1. The RTU shall be capable to operate on 110 V DC (with +10% to –20% variation) supply. The different voltage levels required for operation of various cards/modules of RTU shall be provided by this PSU. The design of PSU shall enable easy troubleshooting and replacement in case of failure. Alternately redundant modular power supplies (each I/O rack, CPU, line driver to operate directly on 110 V DC) may be provided. Higher rated power supplies are more prone to failures also individual power supply provides isolation between modules.

5.4.2 The failure of PSU may lead to total shut down of the RTU hence the design and selection of components for PSU shall be such as to achieve zero failure under extreme service conditions. In no case the required output voltage level of PSU should drop below designed value while taking on load. Overloading by any module due to its internal failure should not cause the total failure of PSU. It shall be possible to isolate/switch-off one unit of the redundant PSU set without removing any connections. This shall enable testing/troubleshooting of faulty unit within a PSU set. Power Supply Unit should be hot-swappable so that replacement of any one unit does not cause shutdown of the RTU. Power supply failure indication from each of the redundant power supply units should be reported to RCC.

5.4.3 The PSU shall have suitable EMI filters capable of filtering all switching surges, electrical noise and high frequency transients.

5.4.4 The output voltage regulation shall be of the order of 1% from no load to 120 % load for each class of the voltages. The ripple factor shall be less than 1% for 120 % loaded conditions.

5.4.5 The PSU shall be designed for 120% of the load rating for 15 min. The PSU shall have fold back characteristics beyond this.

5.4.6 The Power supply should be able to withstand momentary short circuit (not longer than 20ms), and recover automatically once the short circuit condition is eliminated.

Particular output voltage level should be able to withstand overloading/ short circuit condition caused by any card/ module. It should keep off the particular output voltage level circuit only till elimination of overload/short circuit condition and thus not leading the total failure of PSU.

5.4.7 Technical Particulars, characteristics and any other details of the PSU shall be submitted, to the RDSO at time of design approval.

5.5 OTHER REQUIREMENTS OF RTU

5.5.1 Interposing contactors/relays for operating the closing and tripping circuits shall form part of the SCADA equipment. The contactors/relays shall be suitable for 110 V DC supply varying from + 10 % to -20%. The contacts of relays shall have a continuous current carrying capacity of minimum 10 A, making capacity of minimum 20 A and breaking capacity of minimum 2 A inductive load. Suitable spark quenching circuit shall be provided to take care of breaking inductive loads.

5.5.2 The independent Transducers/Multi-Function meters (MFM)/ABT Meter required for acquiring Analog inputs from CT/PT shall also be supplied by the manufacturer. Technical Particulars, characteristics and any other details of the transducer shall be submitted at time of design approval.

5.5.3 The transducers/MFM/ABT Meters shall be selected for nominal 110 V AC (Ph-Gr voltage) and 1A/5A CT/PT inputs. The transducers shall be suitable for 20% continuous over load and shall be able to withstand 20 times the normal current rating for a period of one second. It shall be able to accept the input voltages up to 120% of the nominal voltage. The transducers offered shall have low VA burden. Transducers shall provide at least the following parameters as a minimum with the specified accuracies.

Sl. No.	Parameters	Accuracy
i.	Voltage (Each phase to neutral and phase to phase)	±0.5%
ii.	Current (each phase)	±0.5%
iii.	Active Power, Reactive power, Apparent Power	±0.5% / ±1%
iv.	Import & Export Energy (active/reactive)	±1% / ± 2%
v.	Power Factor (measuring range)	0.5 lag to 0.5 lead
vi.	Auxiliary Power supply	110 V DC
vii.	Frequency	±0.01 Hz

5.5.3.1 Transducers shall be provided with RS485 interface to communicate with RTU over Modbus protocol in multi-drop mode.

5.5.3.2 The transducer/MFM/MFT shall also be provided in RTU of Sectioning & Paralleling Post (SP) in order to know the voltage & other parameters.

5.5.3.3 The multi-function meter (MFM)/ABT meter shall generally comply with the test requirements as per latest IEC/IS standards including IEC 60687/IEC 60688/IEC 801-4/IEC 801-3.

5.5.4 The terminals required for interfacing the controlled stations with RTU at TSS shall be provided by the Purchaser in the control and relay panel at TSS. The terminal at SP / SSP shall be provided on a terminal board mounted on the wall inside the masonry building at SP / SSP. The supply of cables and wiring between the control and relay panel / terminal board and RTU shall be done by the successful manufacturer. The wiring shall conform to clause 5.2.5 above.

5.5.5 Manufacturer shall provide a separate low resistance earth for RTU as per RDSO Specification no. TI/SPC/PSI/ERTHNG/0210, Rev. 02 or latest for code of practice for earthing of power supply installation. Pipe type earthing electrode shall be provided as per clause no. 6.1 & 6.2 of RDSO Specification no. TI/SPC/PSI/ERTHNG/0210, Rev. 02 or latest. The RTU body/frame shall be suitably connected to the separate earth only. This earthing electrode would be connected to the RTU using two nos. 8 SWG bare copper wires. Similarly, the communication equipment ground shall be connected to the signal ground of the incoming signal line. Overall responsibility to ensure suitable design of RTU earthing arrangement to avoid failures of electronic cards etc. in RTU shall be of the manufacturer. Earth resistance of the installed electrode shall be between 2 ohm and 10 ohms, or better, depending upon soil resistivity.

5.5.6 **Protection against Surges**

i. The power supply unit/DC-DC converter of RTU shall have internal protections against under voltage, over voltage, overload and short circuits in addition to adequate protection against surges and lightening in compliance of IEC 60870-2-1, & IEC 60364-5-53 as applicable.

ii. Surge Protection Device of Class D type shall be provided in RTU for protection of RTU against switching surges travelling through communication line as per IEC 61643-21.

5.5.7 The RTUs should be capable of integrating anemometer on MODBUS protocol or 4-20 mAmp interface & telesignaling from anemometer should be available on workstations (MMI). Anemometer shall be installed and wired to the RTU by the Purchaser.

5.5.8 **Cyber Security**

RTU shall support RBAC (Role based access control) according to IEC 62351-8.

- Proper Encryption in the field data (data from RTU to RCC) shall be implemented as per IEC 62351 Standards as applicable.
- Proper Security measures and policies for handling unused communication port shall be taken.
- The firmware integrity verification (digitally signed firmware) shall be carried out prior to the firmware update.
- A patch management policy shall be adopted which shall be based on established standards like CLC/TS 50701. Enterprise patch management system shall be implemented as per IEC 62443-2-3 as applicable.
- Multi-level authorization shall be implemented for the firmware update operation as per patch management policy.
- The opening/closing of RTU door shall be stored as an event.
- RTU shall communicate with white listed SCADA servers only. Requests from unauthorized systems/IP shall be rejected and logged by the RTU.
- All connection requests received by the RTU shall be logged using external protocol analyzer including connection acceptance and rejection.
- Access to RTU via its configuration software shall be protected using username/password combination. Facility to have multiple users with different access rights shall be possible.
- Access to RTU via its configuration software shall be archived and shall be stored in RTU as an event.
- It shall be possible to enforce configuration software access, only after appropriate access from SCADA software.
- RTU shall prevent execution of unauthorized third-party applications.

2337166/2023/O/o PED/TI/RDSO

6119

5.5.9 **Asset management**

- RTU shall calculate the transformer on-load operating hours and report the same to SCADA or SCADA can itself calculate the same. Alarm generation on exceeding a preset limit shall be possible to inform the TPC on need for maintenance or transfer of load to standby transformer.
- CB operation counter shall be maintained by the RTU, and reported to SCADA or SCADA can itself maintain the CB operation counter. Alarm generation on exceeding a preset limit shall be possible to inform the TPC on need for maintenance.
- SCADA software shall monitor the telecom equipment and accordingly compute the telecom channel daily availability figures, as well as availability figures of each equipment such as RTU.

SECTION 6

TELECOMMANDS, TELESIGNALS, MEASURANDS

Please refer to Annexure-4 for complete I/O List.

6.0 FOR 25 KV AC, 2x25 KVAT & SUB-URBAN TRACTION POWER SUPPLY SYSTEM

6.1 EQUIPMENT CAPACITY

6.1.1 The SCADA equipment shall be designed for the following typical capacity of telecommands, telesignals and telemetered parameters for a TSS, SSP, SP and ATP of double line section. The figures given below may vary depending on the layout of TSS, SP, SSP& ATP in a particular section, which could have single, three or more tracks, the details of which will be given by the purchaser in the tender document. The RTU shall be wired and ready for use as per the input/output list specified in the project or specified below. The RTU panel shall be complete with relays, contactors, transducers etc. for the quantities as indicated in a contract.

Alarms/status to be monitored in SCADA, marking each alarm as being applicable to 25kV or 2x25kV or Sub-urban as per DI/DO/AI requirements.

Minimum IO capacity required for 25KV TSS (up to 4 lines):

Sr. No.	Type of Input/Output	Hardwired	From Relays/MFT
1.	Telesignals (DI)	128	500
2.	Telecommands (DO)*	56	32
3.	Measurands (AI)	6	32

Minimum IO capacity required for 25KV SSP/SP (up to 4 lines):

Sr. No.	Type of Input/Output	Hardwired	From Relays/MFT
1.	Telesignals (DI)	64	200
2.	Telecommands (DO)*	32	20
3.	Measurands (AI)	6	32

Minimum IO capacity required for 2X25KV TSS (up to 4 lines):

Sr. No.	Type of Input/Output	Hardwired	From Relays/MFT
1.	Telesignals (DI)	128	800
2.	Telecommands (DO)*	56	32
3.	Measurands (AI)	6	40

Minimum IO capacity required for 2X25KV SSP/SP (up to 4 lines):

Sr. No.	Type of Input/Output	Hardwired	From Relays/MFT
1.	Telesignals (DI)	64	100
2.	Telecommands (DO)*	40	10
3.	Measurands (AI)	6	10

*These telecommands include both ON and OFF.

6.1.1.1 There shall be provision of spare AI, DI and DO cards/modules in RTU, as explained below.

Type	Nos.	Card/module of	Remarks

2337166/2023/O/o PED/TI/RDSO

6121

		minimum capacity	
DI	1	16 for TSS/SP & SSP.	Spare cards/module complete with RTU wiring and contactors (for minimum capacity) shall be provided.
DO	1	8 for TSS/SP/SSP.	
AI	1	4 for TSS.	AI cards/module without transducers, for future requirement of measurands like energy parameters, battery charger monitoring etc. IED's/Energy Meter may also be used to increase the accuracy & reliability.

10% spares may be kept at RCC (instead of) providing spare AI/DI/DO cards in the RTU since it is practically not possible to ensure healthiness of so many cards over a long period.

6.1.2 Spare capacity shall be readily available to the purchaser and realized by simply configuring from the software.

6.1.3 The basic design of TSS, SSP, SP & ATP RTUs shall be identical for the purpose of interchangeability and standardization. Actual DI/DO/AI shall be provided & configured as per requirements.

6.2 Typical requirement of telecommands, typical requirement of telesignals and typical requirement of measurands shall be as per Annexure-4.

6.3 Monitoring of voltages of the OHE (Catenary) on both side of SP:

Two voltage transducers shall be provided at SP for both sides, taking reference either from the UP or DOWN line PT through a suitable changeover device for each side of SP. In the event of failure of any of the UP/DOWN line PT; the changeover device shall automatically connect the healthy PT to the transducer.

Note: - A particular project may require certain additional parameters to be handled in a special way. It would be vendor's responsibility to understand and implement these requirements.

6.4 Some of the telesignals (alarms / status inputs) have been mentioned below for vendor's clarity.

6.4.1 **110V DC low alarm and voltage monitoring**

This indication shall appear when voltage of 110V battery falls below preset level of 103V and/or 110V battery charger fails to deliver the output either due to failure of 240V AC input or defect in the battery charger for a pre-defined period. The DC low alarm shall only be displayed when the DC low voltage persists for more than 5 minutes.

There should also be a provision to display the battery voltage at RCC.

6.4.2 **240V AC fail and voltage monitoring**

This indication shall be telesignalled in case the alarm persists for a predefined period of 5 min. For this purpose, hardware timer may be used.

There should also be a provision to display 240V A.C. at RCC.

6.4.3 **Catenary status alarms & Voltage monitoring**

Outdoor type 25 kV/100V, 30 VA PTs are installed at all controlled stations (i.e., TSS/SP/SSP) by the Purchaser for monitoring the catenary status.

There should also be a provision to display catenary voltage of TSS, SSP & SP at RCC.

6.4.4 **Feeder P.T. fuse fail**

Failure of individual fuse of above PTs shall be monitored by the RTU. If associated relay has not the facility of PT Fuse fail output then "PT fuse fail" indication shall be generated through rectifier and no-volt relays.

6.4.5 **Transmission line PT fuse fail (wherever required) & Incoming HV PT indication**
Similar arrangement for Transmission line PT fuse fail as explained in above Sub Para shall be adopted.
There shall be provision for display of indication of Metering PT in RTU and in SCADA, so that Grid supply information may be available continuously.

6.4.6 **Power Transformer alarm.**

These telesignals shall appear in case of initiation by Buchholz relay, oil temperature indicator, winding temperature indictor or oil level indicator. Necessary auxiliary contacts of various relays/ indicators suitably wired up and terminated on the control and relay board at traction substation shall be provided by the Purchaser.

6.4.7 **Transformer Faults**

These telesignals shall appear in the event of fault in the transformer resulting from operation of inter-trip relay initiated by differential relay, earth leakage (LV & HV) relay, Instantaneous over current, IDMT OCR on HV, Buchholz relay, winding temperature trip, oil temperature trip and PRD.

Note:- Separate telesignals shall be provided for each fault if demanded by purchaser.

6.4.8 **Transformer Trip circuit 110 V DC failure.**

This indication shall appear in case of failure of 110 V DC supply to the trip circuits of 220 / 132 / 110 / 66 kV or 25 kV transformer circuit breakers.

6.4.9 **Transformer tap positions**

The conventional transformer tap changer switch has six/seventeen tap positions. For each tap position one "NO" type contact is provided. At any tap position, only the corresponding "NO" contact will remain closed and the remaining contacts will remain open. Alternatively, transformer tap positions can also be taken as Analog inputs based on 4-20 mAmps.

The traction power transformers at TSS may be provided with AVR (automatic voltage regulator) operated on load tap changer (OLTC) details of interface of which shall be furnished by purchaser.

6.4.10 The RTU shall be capable for interfacing RTD devices for measuring temperatures defined for Traction Power Transformer and displaying the real time values at RCC. Supply of RTD is not in the scope of SCADA vendor.

The temperatures to be displayed

i. HV Winding temperature
ii. LV Winding temperature
iii. Regulating winding temperature
iv. Oil temperature

Necessary hardwiring between RTD interface device and RTU shall be in the scope of SCADA manufacturer. The SCADA should be able to communicate with the RTD interface device through RS 485 over IEC 60870-5-103 or MODBUS provided on the transformer for above mentioned parameters.

6.4.11 RTU shall be capable for interfacing NIFPES, Anemometer, battery charger, power quality compensating equipment etc. through RS 485 over IEC 60870-5-103 or MODBUS protocol / IEC 61850 protocol through Ethernet port for telesignaling of

different alarm/parameters to RCC. Modbus register address of these equipment shall be furnished by purchaser.

6.4.12 **Power Quality Restorer (PQR)**

PQR is an equipment intended to be provided at the Traction Sub-Station with an aim to improve the average power factor and mitigate the harmonics fed into the supply source. Supply of PQR is not in the scope of SCADA Vendor.

The control of PQR shall normally be switched in or out by control commands issued by Traction Power Controller (TPC) of the Remote Control Centre. These tele-commands shall be issued with the help of SCADA System provided at RCC.

For the purpose of tele-commands and tele-signaling, suitable terminals shall be provided on terminal blocks, which shall be duly wired for the following:

i. Tele-signal for supervision of secondary fuse of potential transformer.

ii. Tele-command for operation of circuit breaker of Power Quality Restorer.

iii. Any other tele-signals required for monitoring the healthiness of the transformer, capacitor units, IGBT or any other switching device as recommended.

Necessary hardwiring between PQR interface device and RTU shall be in the scope of SCADA manufacturer. The SCADA should be able to communicate with PQR interface device through RS 485 over IEC 60870-5-103 or MODBUS provided on PQR.

6.4.13 **Digital Surge Counter:** The RTU shall be capable of integrating Digital Surge Counter (if provided) through RS 485 over IEC 60870-5-103 or MODBUS so as to monitor the healthiness of Lightening/Surge arresters by monitoring Surge Count on SCADA. The SCADA Software shall have the provision for configuration of the same.

6.4.14 **Burglar Alarm:** 02 Nos. of Burglar Alarm shall be provided by the SCADA Vendor at each TSS/ SSP/ SP preferably installed in the door of Battery Room and Control Room. The Burglar Alarm System shall be activated by door opening and shall be interfaced with the RTU/SCADA by the SCADA Vendor.

6.4.15 Other relevant requirements

6.4.16 The closing and tripping circuits of the circuit breakers, interrupters and motor- operated isolators are designed to operate on 110 V DC battery supplies, the batteries shall be provided by the purchaser.

6.4.17 The protective relays like OCR, DPR and WPC reset themselves immediately after operation. These relays are fast acting relays; circuit should be able to respond to input stimulation for short time. Suitable anti bouncing filters should be provided for avoiding repetitive alarms. The RTU shall be set to capture contact operations of 20ms or more duration.

6.4.18 For under-voltage monitoring at the SP, the catenary voltage sensing shall preferably be done through rectifier and solid - state comparator circuits so designed that the de-energized indication on the MMI appears at a voltage selectable between 50% and 70 % and disappears between 60% and 80% of the rated voltage viz. 100 V AC.

6.4.19 Other than special telesignals as explained in Para 6.4, the balance telesignals shall be acquired through opto-couplers. The rectifiers, comparator circuits, no- volts relays, opto-couplers, timers shall form part of the RTU.

6.4.20 Please refer Annexure 4 as point address mapping information of IEC 60870-5-103 Protocol. The point address mapping information of IEC 61850 Protocol shall be as per IEC 61850 standard.

SECTION 7

TESTING AND COMMISSIONING

7.1 INTRODUCTION

7.1.1 For any manufacturer developing first SCADA system as per this specification, RDSO shall conduct all the tests stipulated in clause Nos.7.2.1 to 7.2.3.

7.1.2 The successful manufacturer shall be required to submit the complete design details along with drawings for approval of RDSO prior to proto type testing for first SCADA system. Only after the designs and drawings have been approved and clearance given by RDSO to this effect, the manufacturer shall take up manufacture of the prototype unit.

7.1.3 Technical Particulars, characteristics or any other design details of any equipment of SCADA system, if required by RDSO/purchaser, shall be submitted.

7.1.4 Prototype testing shall be carried out by RDSO representative at the manufacturer's works, however, tests for which facilities are not available at the firm's premises shall be carried out at Government test labs/institutions/NABL accredited testing labs and test results of the same shall be submitted to RDSO. If any of the type tests on components or equipment have already been successfully carried out, repetition of such tests can be waived off by RDSO on submission of application seeking dispensation.

7.1.5 Before giving the call to RDSO/Purchaser representative for inspection and testing of the prototype of the system, the manufacture shall submit a detailed test schedule elaborating tests to be conducted in house and at outside agencies.

7.1.6 During the process of type testing or even later, RDSO representative reserves the right to conduct any additional test(s) besides those specified herein, on any equipment / sub-system so as to test the system to his satisfaction or for gaining additional information and knowledge. In case any disagreement arises between the manufacturer and RDSO/purchaser during the process of testing or regarding the type tests and/or the interpretation and acceptability of the type test results, it shall be brought to the notice of the Director General (Traction Installations) RDSO, whose decision shall be final and binding.

7.1.7 Only after clear written approval of the prototype unit based on results of the type tests and field trial successfully, the manufacturer shall take up bulk manufacture of the ordered equipment - which shall be strictly with the same design, material and process as adopted for the prototype units.

7.2 **TESTING OF SCADA SYSTEM:** Testing of complete SCADA system shall comprise of following test categories.

7.2.1 **Type Tests on RTUs:** These are further divided into following categories.

a) Communication Protocol testing.

b) RTU functionality Tests.

c) Environmental, EMI & EMC testing of RTU.

a) **Communication Protocol testing:** All the important services as per IEC 60870-5-104 shall be verified. RTU shall be tested for its proper communication with relays / IED compatible to IEC 61850, IEC 60870-5-103 & MODBUS as applicable. IEC 60870-5-104 compliance report for the complete SCADA system shall be generated. All testing shall be done in presence of RDSO representative.

(i) The Master station cum RTU simulator tool shall be used to test the communication interfaces of Master station, RTU and Protection relays. The Master station simulator tool shall be capable of emulating the master station for IEC 60870-5-104, IEC 60870-5-103, IEC 61850 including MODBUS. The RTU simulator shall be capable of emulating the slave protocols for the IEC 60870-5-104, IEC 60870-5-103, and IEC 61850 for Protection relays. It shall also be possible to prepare illegal messages for transmission, such as messages having invalid checksum.

(ii) The protocol analyser cum logger shall be used to monitor all communication traffic on a channel (between Master station & RTU and between RTU & protection relays without interfering channels operation. Channel traffic captured in the active or passive modes of operation shall be displayed.

(iii) The Master station simulator and protocol analyser tool shall also have following features:

- Each received message shall be checked for validity, including the check sum.
- The tool shall maintain and display error counters so that the number of errors during a period of unattended testing can be determined.
- All fields of a message shall be displayed. A pass/fail indication for the message shall be included.

b) **RTU functionality Test:**

i. Visual Examination: RTUs shall be inspected for the features indicated in the specification and the RDSO approved drawings.

ii. Detailed Architecture and features: Verification of requirements as stipulated in section 5 & 6 shall be carried out.

iii. Transducers accuracy shall be verified over the entire range for linearity and accuracy.

iv. Functional tests shall be conducted on the PSU

1. Stability of output voltages with the variation of input DC (94- 121V) voltage.
2. With 120% of the normal designed rated load, the voltage regulation and the ripple factor.

C. Environment and EMI test on RTU:

1. The following tests shall be conducted on the RTU sub assemblies (cards/modules).

TEST No.	DESCRIPTION OF THE TEST	EUT Status	Test Level	Power supply points		I/O Points	Passing Criteria
A	EMI/EMC IMMUNITY TESTS FOR RTU			CM	DM	DM	
1.	Surge immunity test as per IEC 60870-2-1 (Test method: 61000-4-5)	ON	Level 4	4 kV	2 kV	2 kV	A
2.	Electrical Fast Transient Burst Test as per IEC 60870-2-1 (Test Method: IEC 61000-4-4)	ON	Level 4	4 kV	-	2 kV	A
3.	Damped Oscillatory WAVE Test as per IEC 60870-2-1 (Test Method: IEC 61000-4-18)	ON	Level 3	2.5 kV	1 kV	1 kV	A
4.	Electrostatic Discharge test as per IEC 60870-2-1(Test Method: IEC	ON	Level 4	+/- 8 kV in contact discharge mode or			A

	61000-4-2)			+/- 15kV in air discharge mode	
5.	Radiated Electromagnetic Field Test as per IEC 60870-2-1(Test Method: IEC 61000-4-3)	ON	Level 3	10 V/m electric field strength	A
6.	Power Frequency Magnetic Field Test as per IEC 60870-2-1 (Test Method: IEC 61000-4-8)	ON	Level 4	100A/m of magnetic field strength (continuous duration sine wave)	A
7.	Conducted Disturbance induced by Radio Frequency field as per IEC 61000-4-6:1996	ON	Level 3	10V, 150 KHz to 80 MHz	A
8.	AC Ripple in DC supply as per IEC 61850-3 and IEC 61000-4-17	ON	Level 3	10 % of nominal DC Voltage	0
9.	For voltage dips and short interruption as per IEC 61850-3 and IEC61000-4-29	ON	-	Voltage dip: 30% of Un for 0.1s, 60% of Un for 0.1s, Short interruption: 100% of Un for 50ms	A
B	INSULATION TEST FOR RTU				
10.	Power Frequency Voltage with stand Test as per IEC 60870-2-1 (Test Method: IEC 60255-27)	OFF	VW3	2.5kVrms for 1 minute	No break down or flashover
11.	1.2/50 µs Impulse voltage withstand test as per IEC 60870-2-1 (Test Method: IEC 60255-27)	OFF	VW3	5kV for power ports,1kV for signal ports	No break down or flashover
12.	Insulation Resistance test (Test Method: IEC 60255-27)	OFF		Measure Insulation resistance using 500 V DC Megger before & after Power frequency &Impulse voltage withstand tests.	> 100M Ohm
C	ENVIRONMENTAL TEST FOR RTU				
13.	Dry heat as per IEC 60068-2-2	ON		Continuous operation at 55^0C for 96 Hours.	0
14.	Damp heat test as per IEC 60068-2-78	ON		At 40^0C and 95% RH in operational condition for 12 Hours	0
15.	*Cold test as per IEC 60068-2-1	ON		-10^0C operational condition for 16 Hours.	0
16.	Damp heat test Cyclic as per IEC 60068-2-30	ON		At high temperature at 55^0C and low temperature at 25^0C; Dwell time in	0

				high or low temperature for 3 Hours. Transition of 1^0C per minute, and for 6 such cycles in operational condition.	

* The vendor who got order for high altitude, these test shall be carried out at -25^0C.

Note:- EUT-Equipment Under Test

CM- Common Mode; DM- Differential Mode

I/O points includes DI, DO, AI, communication ports

Passing Criteria:

0 – no failure; normal performance within the specified limit

A- Minor failure: Temporary degradation or loss of function or performance which is self- recoverable, however issuance of control output command is not allowed.

The vibration test specified as under shall be conducted on the complete assembled RTU.

17	Vibration test as per IEC 60068-2-6: sweep frequency 10 Hz-150 Hz. Acceleration - 0.15mm/2g Sweep rate - 1 octave per minute, Number of sweep cycles per axis(X,Y,Z) - 20 Cycles
18	Enclosure Protection test IP 51 as per IEC: 60529

7.2.2 SOFTWARE FUNCTIONALITY TESTS:

These tests shall be performed on master station software to verify its features as per section 3 of this specification. The testing shall include overall design display of screen, Event and Alarm displays, configuration facility, security functions and Report generation etc.

7.2.3 CYBER SECURITY CONFORMANCE TESTING:

The Cyber security testing of Operational Technology Infrastructure of SCADA (Remote Terminal Units (RTUs), Intelligent Electronic Devices (IEDs) & Gateways with IEC 60870-5-104 communication protocol) and Information Technology Infrastructure of SCADA shall be done from government labs or NABL accredited labs. The CEA (Cyber Security in Power Sector) Guidelines, 2021 or latest by Ministry of Power, Government of India, shall be referred for the same and followed accordingly.

7.2.4 INTEGRATION TESTS

1. Integration test shall be done on a Lab setup of a typical SCADA system at manufacturer premises to test the basic SCADA software functionalities.

These tests shall be carried with minimum four RTUs (of highest possible configuration) which shall be hooked up with PC setup in the form of RCC through communication media in a multi-drop manner. During the tests, complete functionality of the SCADA system shall be verified in terms of Section- 3, 5, 6 & 9 of this specification along with NMS.

2. The integration test shall be carried out to check and ensure the capability of 1 set of SCADA Server to cater at least 100 numbers of RTUs and shall be verified by the Simulation Software at the time of Type testing of the SCADA System.

3. In the Integration test, the following test shall also be carried out, the detailed procedure of which shall be formalized by the SCADA Manufacturer.

- Establishing communication with 100 RTUs over IEC 60870-5-104 protocol simultaneously.
- Handling events bursts without affecting system performance and operator action response times.
- Status update and Command response time on 100 RTU system during normal operation and during event burst conditions.
- Time-synchronization accuracy and time-skew between the RTUs.
- EMS reports and dashboards presentation for 100 RTUs.

7.2.5 ROUTINE TESTS ON SCADA SYSTEM:

This inspection shall be carried out by the purchaser representative as per RDSO specification & approved drawings on each RTU before dispatch from the works.

7.2.5.1 Visual inspection: RTUs shall be inspected for the features indicated in the approved drawings.

7.2.5.2 Tests on status modules: The auxiliary contacts of the circuit breakers and interrupters shall be simulated by relays. The supply shall be given to terminal block for checking the ON and OFF status in the devices.

7.2.5.3 Telecommands: After giving the control commands from simulator (PC) the operation of corresponding interposing contactors shall be checked. The command output from RTU to the intended controlled device shall be checked at the terminal blocks provided for the purpose.

7.2.5.4 Insulation resistance Tests: Insulation resistance of cables shall be checked without connecting electronic circuits between various circuits, contacts, and terminals with a 500 V megger. It should not be less than 100 mega Ohms.

7.2.5.5 RCC PC/Servers/Printers/Laptop etc. shall be checked as per approved drawings.

7.2.6 TESTS AFTER ERECTION AND COMMISSIONING:

7.2.6.1 Tests shall be carried out during/ erection/commissioning of the equipment at site on the complete system in the presence of the purchaser's representative to check the proper erection and successful commissioning of the equipment. These tests shall be carried out to check the compliance of the SCADA system with the stipulations made in the specification/drawings.

7.2.6.2 Command operation time shall be measured.

7.2.6.3 Complete SCADA system working after full configuration shall be verified.

7.2.6.4 System response to abnormal conditions, hot and standby switchover, self-check and diagnostic features etc. Implementation of special logics shall also be verified.

7.3 FIELD TRIAL

7.3.1 After successful type testing of prototype, *minimum 5 RTU's, 01 set of Front end Server (Main & Standby), 01 set of SCADA Server (Main & Standby), 01 set of Energy Management Server (EMS) (Main & Standby), 01 Network Management System (NMS) Server, 01 Web Server and minimum 05 no. of Workstation grade PC's (02 no. for SCADA Server, 02 no. for EMS Server and 01 no. for NMS Server)* is required to be commissioned against order in Indian Railways for field trial for a period of six months. If field trial is not satisfactory, the prototype shall be treated as failed and further action shall be taken as per applicable RDSO ISO document of vendor approval. Any modifications found necessary during prototype testing and field trial shall be carried out

by the manufacturer at his own cost. Field trial shall be applicable for fresh vendor registration cases.

The performance of SCADA system during field trial shall be judged based upon the satisfactory performance of the following:

1. CPU Card
2. Power Supply Card
3. AI Card
4. DI Card
5. DO Card
6. Transducers
7. Relays/ Contactors
8. Communication Module
9. UPS
10. Servers, its mother board, hard disk, SMPS etc.
11. MMIs, its mother board, hard disk, SMPS etc.
12. LAN switch and its peripherals.
13. SCADA Software.

7.3.2. After the satisfactory performance of the field trials, the firm may be considered for approval.

7.4 PACKING & DISPATCH

i. Each RTU panel shall be packed in a suitable bio-friendly material/wooden crate after wrapping it in Foam sheet& a polyethylene sheet. Wood used for crating should be 15-20mm thick, 75mm wide. Separation between wooden stripes should be between 150-200mm

ii. Major delicate electronic items such as computers/monitors, printers, RTU cards, networking equipment, modems etc. should be packed separately in cardboard boxes. Each wooden crate containing electronic items should not weigh more than 75kg.

iii. All hard copy documents shall be packed in a separate box.

iv. Each crate should have proper identification code and a list kept in side it giving details of contents of the box and site for which it is meant.

7.5 ERECTION AND COMMISSIONING:

i. The erection and commissioning of SCADA equipment shall be done by the successful manufacturer who shall arrange all tools, plants instruments and other material required for the purpose at his cost.

ii. If any testing or measurement on SCADA system communication equipment is needed, same shall be carried out by the manufacturer along with purchaser's representative for satisfactory working of the system.

iii. Cyber security audit by a Government-approved third-party agency shall be conducted by SCADA vendor during erection and commissioning. Any vulnerabilities/ issues identified during the audit shall be rectified by the vendor and revalidated by the third-party agency.

7.6 TECHNICAL DATA, DRAWINGS AND INFORMATION.

7.6.1 The manufacturer shall furnish guaranteed performance data, technical and other particulars of the equipment in the Performa at Annexure-2 along with his offer.

7.6.2 The successful manufacturer after award of contract shall submit the following to the purchaser:

a) General layout of RTU's and their connection with master station equipment through communication cable.

b) Hardware configuration of RTU's (TSS, SSP & SP).

c) Software configuration of RTUs.

d) A write-up explaining the principal of operation of the equipment.

e) The general arrangement drawing of RTU cabinets (TSS, SSP, SP) showing module layout transducers and interposing relays.

f) Any other details considered necessary for the proper understanding of the system.

g) The general arrangement drawings should also indicate the overall dimensions as well as mounting details.

h) Wiring diagram

i) Detailed step by step procedure for operation, maintenance and repairs of the system and individual equipment indicating procedure for trouble shooting, measurement of various signals at different points and diagnostic checks to be adopted for repairs at site.

j) Licensed copies of CD/DVD of SCADA application and peripheral software along with write up on software features, instructions for configuration, working of software and procedures for taking out report and data in the form of instruction manual/guide. The SCADA software licence should also be handed over to division. Whenever updated the same should be advised or made available on line.

SECTION 8

TRAINING, MAINTENANCE AND WARRANTY

8.1 TRAINING OF RAILWAY STAFF

The successful manufacturer shall train two Engineers and six Supervisors of the Purchaser, free of cost at manufacturer's works. The total duration of training shall be 2 weeks, of which approximately 1 week will be at manufacturer's work and 1 week will be at site. The cost of travel & stay shall be borne by the purchaser. Any other training requirement shall be specifically mentioned by purchaser. The training should be immediately after supply of equipment and before commissioning.

The training shall broadly cover following aspects.

a) Identification of various cards & components of RTU.

b) Erection, commissioning and wiring of RTU and troubleshooting of the RTU.

c) Configuration of addresses of RTU, future expansions of the RTU and setting up of additional telesignals and telecommands.

d) Using the test instruments to check the communication cable performance parameters.

e) Training in operation of RCC software and MMI display functions.

f) Training in configuration of SCADA software, changing the setting of the software, generating various reports etc.

g) Training in Industrial Control System (ICS) Firmware Security and in following secure practices such as password protection etc., as per CLC/TS 50701 and IEC 62443-2-1.

h) Formatting of hard disk, loading of the Operating system, loading of the basic SCADA application software and taking back up of files.

i) Operation & maintenance instructions recommended by OEMs of different SCADA sub-systems.

j) Training in configuration of network equipments such as switches, routers, GPS and firewall.

8.2 TOOLS AND PLANTS/TESTING INSTRUMENTS FOR SYSTEM MAINTENANCE:

The manufacturer shall quote for the following testing equipment, giving unit prices of individual items.

a) Two laptop computers as specified in clause 2.2.8.2 for trouble shooting of the faults of RTU and the SCADA system.

b) LAN Tester of any reputed make (quantity 2 numbers)

c) Four & half (4 ½) Digital Multi meters of Meggers / Fluke / Yokogawa or any reputed make equivalent (quantity 2 numbers).

Full technical details of the instruments shall be furnished along with the offer.

If the model gets obsolete, the subsequent released model shall be applicable.

8.2.1 The Successful manufacturer shall supply 6 sets of maintenance manual, troubleshooting charts and guide lines for reliable and trouble-free SCADA system operation including all sub components of the system to the purchaser.

8.3 MAINTENANCE OF THE SYSTEM

8.3.1 Annual Maintenance Contract:

In order to give proper maintenance support, AMC for a period of Four years (excluding warranty period of three years) shall be part of the contract. The AMC shall be for complete SCADA system including RTU, RCC Equipment i.e., computers, RCC/RTU software and all

other associated equipment, except all telecom equipments i.e. Routers, LAN extenders/2MbPS Digital Modem, media converter etc. Details of AMC clauses such as payment conditions, bill paying/passing authority, the extent of responsibility and other relevant aspects shall be included in tender documents.

8.3.1.1 The RCC equipment shall require replacement due to rapid change in technology, ageing and obsolescence during the period of AMC as per following periodicity:

S.N.	Equipment	To be changed after
1.	Computers along with monitors & Printers	5th Year
2.	VRLA batteries	6th Year
3.	UPS	6thYear

The period of replacement of RCC equipments shall be taken into effect from the date of commissioning of SCADA System.

8.3.1.2 In addition to above 10% of the total holding of the different types of cards/modules of RTU (e.g., DI, DO, CPU, AI, PSU, etc.) shall be handed over to the purchaser after 07years or completion of the AMC period for using as spares for remaining life of the SCADA system. Purchaser shall define the detailed scope of AMC.

8.3.1.3 The SCADA manufacturer shall include these aspects while quoting prices for Four years AMC. Quote for AMC and supply of SCADA system along with successful commissioning shall be separate, for better assessment of the price of complete SCADA system.

8.3.1.4 The purchaser shall clearly define the following in the tender document.

i. Minimum acceptable down time for RCC and RTU.
ii. No. of maintenance persons and their duty hours during warranty and AMC period.
iii. No. of days in a week when the maintenance person shall remain available to attend the system faults.

8.3.1.5 Formula for costing up gradation in the same RTU & addition of complete RTU duly integrated with RCC to be evolved and the same shall be mentioned in the offer clearly.

8.3.2 WARRANTY

The complete SCADA System with all parts and accessories supplied against a purchase order/contract against the tender in which this specification is quoted, irrespective of original individual equipment (imported/indigenous) shall be guaranteed for trouble - free and satisfactory performance for a period of 42 months from the date of supply or 36 months from the date of commissioning, whichever period is earlier. Details of warranty clause, the extent of responsibility and other relevant aspects shall be included in the contract. The manufacturer shall furnish detailed terms and conditions in this regard in his offer. The warranty shall be for complete SCADA system including RTU, RCC Equipment i.e., Computers, RCC/RTU software and all other associated equipment like UPS, battery, wiring, connectors, contactors/relays etc.

Further, the maintenance of complete SCADA System shall be carried out by SCADA manufacturers during warranty period. The requirement of maintenance activities to be carried out by SCADA manufacturers shall be included by the Zonal Railways in the tender document.

8.3.3 The successful manufacturer shall make necessary arrangements for spare parts modules and other items to be kept readily available so that there is minimum disruption to the operations.

8.3.4 Cyber security audit by a Government-approved third-party agency shall be conducted annually during warranty/AMC period by SCADA vendor/AMC taking firm. Any

2337166/2023/O/o PED/TI/RDSO

6133

vulnerabilities/ issues identified during the audit shall be rectified by the vendor and revalidated by the third-party agency.

	Prepared By	Checked By	Issued by
Signature	Vikash		
Date	09.11.2023	09.11.'23	09/11/23
Designation	JE/ TI	ADE/ TI-3	DIRECTOR/ TI-3

2337166/2023/O/o PED/TI/RDSO

SECTION 9

ENERGY MANAGEMENT SYSTEM

9. Energy Management System (EMS):

9.1 A dedicated Energy Management System (EMS) shall be provided at the Remote Control Centre. EMS shall record all energy parameters at HV /LV sides of all the FP/TSS locations in the section. EMS shall provide logging, storage and visualization functions for the data acquired from the sites. Basic visualization functions, like graphs, tabular data, shall be provided.

9.2 Apart from EMS Main and Standby Server, there shall be a separate Server for EMS Web Applications. Software gateway to transfer the IEC 60870-5-104 data shall be configured on the same Server. There shall be separate server for EMS Web Applications for every RCC Location. This Server shall have 3 Ethernet Ports. Two for redundancy and one for remote connectivity via Firewall.

9.3 For the purpose of EMS, 02 Nos. of Energy Meters (MFM/ ABT meter) of Class 0.2S accuracy shall be provided with all TSS RTU, by the SCADA vendor. The Count of meters may increase or decrease depending upon the no. of Transformers in the TSS. By default, it is considered as two Transformers. The energy meters shall be interfaced with the RTU on RS 485 (MODBUS) or Ethernet (IEC 61850) communication links. If MD is acquired directly from energy meter by the RTU, the energy meter shall be communicated on IEC 61850 protocol through Ethernet port for time synchronization with GPS provided at RCC through SCADA.

9.4 Minimum Requirements of Energy Meter (MFM/ ABT meter):

- Accuracy Class – 0.2S
- 1 no. RS485 port or Ethernet Port to communicate with RTU
- Voltage
- Current
- MW
- MVAR
- MVA
- PF
- Frequency
- Energy Import
- Energy Export
- Maximum Demand

9.5 The energy meters shall provide instantaneous data. The RTU shall acquire these load parameters from the meters and transfer to SCADA, further these energy parameters shall be interfaced to EMS for storage and analysis.

9.6 EMS server with redundant one shall be provided for the data base of energy parameters from different locations in the division. The SQL server 2012 or latest or equivalent RDBMS shall be installed in the EMS server with redundant one. The server will store all data for SCADA server including energy/ electrical parameters, events etc. and the data can be accessed as requested by a separate software application hosted on web server for displaying on remote terminal through Railnet. A redundant EMS Server with same functionality shall be provided and take over if main Server fails.

9.7 The meters shall be installed preferably with CT & PT provided on HV side. If CT/PT is not available on HV side then meter shall be connected with LV side CT & PT. The meter needs to be mounted in the TSS Control & Relay panel at suitable place.

9.8 Real-time acquisition & viewing of the following parameters:

i. Voltage
ii. Current
iii. Active Power
iv. Reactive Power
v. Power Factor
vi. Cumulative Energy (active & reactive) Import & Export energy
vii. MD
viii. Frequency
ix. Apparent Power

Energy Meter installed on HV/LV side of the TSS shall be capable of transferring the energy parameters on real time basis to RTU where MD shall be calculated or it shall be capable of transferring the energy parameters on real time basis to RTU for transferring these parameters to SCADA/EMS if the meter is time synchronized to RTU. The SCADA system shall log the integrated demand / energy in the historical data base. Since there are two or more meters at each TSS, the addition of the maximum demand for these meters shall be carried out in RTU itself on basis of energy parameters acquired by the RTU. In case, the meters are not available on HV side, then LV side metering shall be used for the same purpose, and the compensation factor (user-configurable) for transformer losses shall be used to derive the HV side demand. Based on user configurable, start time for each TSS and interval (5 minutes/15 minutes/30 minutes), the block wise demand shall be calculated in RTU

9.9 The EMS software shall be provided in two different versions. One for installation in RCC and other for installation in State Energy Management Center (SEMC) with following features:-

A. EMS for RCC:

1. Integration of data in 15 (configurable) minutes time block. In case of communication failure between RCC and RTU, it should be possible for this information to be stored in RTU & would be retrieved at RCC by software whenever communication is restored. At least 48 hrs. data should be stored.
2. Comparison of any recorded parameter at different times in history.
3. It should support capturing data for five years history.
4. The EMS software should provide facility to create different dashboards to view various energy parameters. The dashboard editor should allow displaying values either in numeric form, tabular, pie-chart, trend, bar chart etc. as per the requirement. Flexibility should be provided to display all or selected EMS parameters acquired by the system. Calculations on displayed parameters should also be possible through the dashboard editor.
5. The EMS software shall provide facilities to configure alarm thresholds for different parameters, e.g., MD limit, power factor, frequency, etc. Alarms and events shall be generated as per these thresholds and shall be made available to the user via the user interface.
6. EMS shall be capable of relaying the acquired data to Railway SEMC for real-time monitoring of the demand by the grid operators. For this purpose, the EMS software shall be capable of operating as an IEC 60870-5-104 slave. Connectivity between RCC and Railway SEMC shall be via Railnet which will be provided by the Purchaser. Suitable firewalls and/or cyber security mechanisms shall be employed to prevent attacks and unauthorized access to the system.

B. EMS for SEMC:

1. Integration of data in 15 (configurable) minutes time block. In case of communication failure between RCC & SEMC, it should be possible for this information to be stored in RCC &

would be retrieved by software at SEMC whenever communication is restored. At least 48 hrs. data should be stored.

2. System should have the capability to forecast energy data to facilitate demand requirement on day ahead, short time demand etc. based on average energy parameters of previous days / month. It should support data visualization in 15 minutes (configurable) block interval.
3. Real-time comparison between actual demand versus scheduled demand. The system should be able to import finalized drawl schedule as received from SLDC and generate reports on variations. The system should be able to track various revision of drawl schedule.
4. The software should be capable to provide a data tag for each TSS in identification of sub-division, division, Zonal Head Quarter, State and Region.
5. Based on Forecast, Projected schedule, drawl schedule and its revision as received from SLDC, the software should generate report for variation of the same for analysis purpose and to improve forecasting and scheduling by SLDC.
6. Demand requirement shall have the feature of dynamic adjustment.
7. The manufacturer will fulfill the Railway requirement to assist in forecasting & scheduling by SEMC and at the same time, it should be capable of making dynamic adjustment to demand requirement/ scheduling on variations of drawl or any other requirement by SEMC. The manufacturer should provide necessary assistance to the railway in case any modification is required in the EMS software to meet the requirement of SEMC forecasting & scheduling in future. Any assistance required of SCADA manufacturer in configuration of SLDC, the same shall be supported by SCADA manufacturers.
8. The EMS should have the capability to import data from text/xml/Excel file for the purpose of analyzing existing load profile for modeling the demand forecast system by SLDC.
9. Apart from above, any other report / statistics required by the Indian Railways.
10. Machine learning based demand forecasting using historical data stored in EMS
11. Dynamic correction of forecasting based on real-time data
12. Incorporation of power purchase agreements for scheduling of demand as per available declared capacities of generators.
13. Optimal scheduling of power.
14. Import/Export of approved schedules as per SLDC.
15. Real-time monitoring of actual demand against approved demand.
16. Sign-change monitoring for sustained deviation.
17. DSM charges estimation.
18. Holiday calendar to adjust forecast based on known holidays.
19. Facility to view data of EMS from other divisions or zonal centers.
20. Secured login to view EMS data on the web.
21. EMS shall be capable of acquiring the data from multiple RCC EMS for real-time monitoring of the demand by the SEMC operators. For this purpose, the EMS software shall be capable of operating as an IEC 60870-5-104 master. For relaying the acquired data to SLDC, the EMS software shall be capable of operating as an IEC 60870-5-104 slave with support for IEC 62351 security extensions. The connectivity between RCC and Railway SEMC shall be via Railnet and the connectivity between Railway SEMC and SLDC shall be via third party

network. These connections will be provided by the Purchaser. Suitable firewalls and/or cyber security mechanisms shall be employed to prevent attacks and unauthorized access to the system.

22. EMS shall be capable of receiving daily/ periodic approved load schedules from the SLDC. The schedules would be provided in the form of excel or XML/.xls file. The schedules thus received shall act as the baseline against which the EMS will monitor the actual demand, and generate alarms in case of violations, based on the set limits.

23. The load schedules as received from SLDC, as well as the load profiles acquired from the energy meters shall all be recorded in a database. The database shall be part of the EMS and provide query facilities to retrieve stored data based on certain criteria.

24. The manufacturer shall provide 'Configuration of data points and Gateway of new TSS in software at SEMC to transmit online data to SLDC, integration of data points of TSS at SLDC and it's configuration for real time access/monitoring at SLDC (Including Generation of these additional points, integration in SCADA system at SLDC, testing and commissioning of the system'). Data inputs up to SEMC level shall be provided by SCADA Vendors. The configuration at SEMC and SLDC end shall be carried out by the existing SEMC supplier.

25. Railway SEMC has already been set up for most of the State/ Union Territory. If railway SEMC is not set up, then Zonal Railways shall mention as per their requirement of SEMC in the tender specifically.

26. **Details of SEMC Setup:**

i. EMS Server

There shall be two EMS servers (1- Main EMS server & 1- Standby EMS server) at respective SEMC for storing data related to Energy parameters collected from each RCC's EMS server.

EMS server will acquire Energy data from the divisional EMS server and will update its data bank. Energy parameters and switch status to be stored in EMS server. Details of EMS Server and accessories in SEMC shall be as per para 2.2.8.1.

ii. Operator Workstation

There shall be 02 no. of workstation grade PCs at each SEMC. The specification for which is as below:

Item	**Servers**
Brand / Make	Any reputed make
Processor	Minimum i7 processor with latest generation
RAM size	8 GB
Solid State Drive (SSD)	Min 500 GB, SATA
Monitor	42+-1 inch
Video Card	Standard Graphic controllers

Multimedia with accessory	Required
EMI immunity	As per IEC 61000.
Network Interface Card	Network Interface Card (Server & WS): Standard10/100/1000 Mbps Base-T Ethernet Port-02 nos. Based on availability,following options can be provided: • Single NIC card with two LAN ports for redundancy. • 2 separate NIC cards with single LAN port on each card, configured in redundant mode. • Also, on board NIC can also be used for the above purpose.
Number of USB ports	2 minimum
Accessories	Including all cables/ Connectors/ accessories to achieve the complete working of system
Operating System	Windows 10 or latest

. 32 TB Network Attached Storage

A 32 TB Network attached Storage shall be provided at SEMC. NAS typically provides access to files using network file sharing protocols such as NFS, SMB/CIFS, or AFP. The data collected by EMS at SEMC should be provided to NAS for loading to database. 32 TB NAS of reputed make shall be provided.

iv. GPS receiver Master Clock

The GPS receiver with antenna shall be provided to synchronize the timing of the servers with that of standard satellite timing. This shall ensure that all the date/time stamping of the reports generated by the system would be accurate and hence comparable to any external report.

v. A4 Laser Printer

One A4 color laser jet printer of reputed make with 1x10/100 Mbps Ethernet interface-shall be supplied and networked.

vi. Firewall and Router for RCC connectivity at SEMC

The manufacturer shall provide Firewall with routing functionality to receive & transmit the acquired Data through Secure Network Firewall i.e., the data converted into IEC 60870-5-104 protocol will be made available and will be transmitted through router from RCC locations to SEMC and SEMC to further State Load Dispatch Centre using leased lines. The firewall shall prevent unauthorized access to data & restrict users. This will eliminate possibilities of cyberattack. Hardware firewall of reputed make shall be used for this purpose.

For normal operation, router shall use all channels between two locations and in the event of any channel failures, traffic shall be re- routed to the remaining healthy channels with an attempt to generally balance the load.

2337166/2023/O/o PED/TI/RDSO

6139

vii. Managed switch 24 port.

The manufacturer shall provide 24 Ports 10/100/1000 Mbps network switch of reputed make for interconnectivity for Hardware Gateway, firewall & EMS system at SEMC. Servers and peripheral devices shall be connected to each other on a dual local area network (LAN).

viii. 2x5 kVA UPS with low maintenance batteries for 4 hours backup

The manufacturer shall provide on line reliable UPS system of 2x5 kVA rating along with batteries and associated equipments. The scope of work shall comprise of UPS supply wiring to cover all SEMC computers, peripherals and communication equipment.

ix. Gateway and its Configuration at SEMC end for connectivity with SLDC:

The manufacturer shall provide a Hardware/ Software Gateway and its Configuration at SEMC end for connectivity with SLDC. At SEMC a Hardware/ Software Gateway is used. This gateway will receive the data on IEC 104 protocol from the RCCs and forward the same to state Load dispatch centre through leased lines. This gateway will be used which will have one IEC 104 master connectivity & 2 IEC 104 slave output ports, one for SEMC and other towards state Load Dispatch centre using leased lines from SEMC to SLDC.
The technical specifications for Hardware/ Software gateway and software for SEMC location are as under:

Hardware Gateway:

1. Processor: 32 bit
2. RAM: 512 MB
3. Non- Volatile Memory: 2GB
4. Flash Memory: 1GB Internal Watchdog
5. Clock: Internal RTC
6. Communication Ports: 2- Ethernet ports, 2- RS485 Ports, 2- RS232 Ports

Software Gateway:

1. Minimum Octa Core Processor with base frequency of 3.0 GHz. For higher no. of cores: Minimum base frequency of 2.0 GHz.
2. 8GB RAM
3. 1TB SSD in RAID-1.
4. Three 10/100 Network Interface Controllers.
5. 19-inch Rack Mountable
6. Make: Any reputed make

x. Software used in SEMC

The software used in SEMC shall have following features:

1. Web-based or Windows-based Configuration Utility.
2. System Protocols: TCP/IP, UDP/IP, HTTPS, SNMP, ICMP, ARP, SSL, SFTP, SSH.
3. Application Protocols: IEC 60870-5-104 Master, IEC 60870-5-104 Slave.
4. Cyber security functions as per NERC/CIP or equivalent.
5. SSL/TLS encrypted communications between RCC and SEMC.
6. Support for communication channel redundancy on both master and slave ports.
7. Web server for status monitoring.

xi. Interface Hardware and software at SEMC end for connectivity with national level SEMC

The manufacturer shall provide Hardware or Software Gateway at the SEMC. The gateway will acquire data from the EMS server at SEMC and will transfer this data to the SLDC through third party network.

xii. Furniture setup at SEMC

The manufacturer shall provide 3 no. tables, 4 no. revolving chairs, 1 no. sofa set, 1 no. filing cabinet suitable to SEMC layout and requirement of reputed make.

xiii. Web Server with Standard SCADA software

Web Server with Standard SCADA software at SEMC shall be provided by the manufacturer. The separate web server shall be installed in SEMC for accessing the EMS data from any location through internet/Railnet. Necessary firewall to be provided for keeping the system safe from intrusion of virus from outside world.

xiv. Leased Line for IP Connectivity from SEMC to SLDC

Leased Line for IP Connectivity from SEMC to SLDC shall be provided by the manufacturer to make real time TSS data available at State Load dispatch Centre, a leased circuit of 2Mbps is required from nearest Railway Station to SLDC.

xv. Development of workstation at SEMC:

Development of workstation at SEMC at State level for each Nodal Railways.
The scope of this work involves:

a. ***Air-conditioning*** – Cost involves supply, erection & commissioning of Air-conditioning for 10 feet X 12 feet room at SEMC. 2 nos. ACsof reputed make like Voltas, Hitachi. LG, Godrej etc with 2 tons capacity Voltas make model no. 245 DYi or equivalent shall be provided.
b. ***LED lighting***- For proper illumination of SEMC of size 10 feet X 12 feet 04 nos. panel type LED lights of size 1feet X1 feet of SYSKA make model no. SSK-SNT3030 or equivalent shall be provided. Cost involves supply & erection of these LED lights.
c. ***LED display units*** - The cost includes supply installation and configuration of 04 nos. of 40" LED monitors of reputed brands like Samsung, HP etc. These monitors a required for display relevant graph like Scheduled power, Power Consumption, Connectivity with various RCCs etc. at SEMC.
d. Necessary electrical wiring and points.
e. Furnishing of approximately 10 feet x 12 feet room.

9.10. Reporting and trending software module that shall provide a comprehensive report on the parameters of the meters being monitored. A load profile for selected period should be available in tabular as well as trend form. The same shall be accessible via a browser based interface from remote terminals. All values are to be logged at 15/30 minute (according to user configuration) interval.

9.11. The servers shall store all the data for EMS including energy/electrical parameters, events etc. and the data can be accessed as requested for displaying on remote terminals. The status of EMS servers will also be displayed on SCADA workstations.

9.12. The manufacturer shall support integration of data points of all the TSS with respective state SLDCs. These data points shall be configured for real time access/monitoring at State Load Dispatch Centre. Data inputs up to SEMC level shall be provided by SCADA Vendors. The configuration at SEMC and SLDC end shall be carried out by the existing SEMC supplier

2337166/2023/O/o PED/TI/RDSO

SECTION 10

OPERATIONAL ASPECTS OF CYBER SECURITY IN SCADA FOR ZONAL RAILWAYS

10.1 The passwords used in RTU and RCC shall be changed periodically preferably once in six months.

10.2 Policies shall be formulated by zonal railway for accessing for any change or modification of the firmware or control logic program or controller configuration of the controllers with proper justification as per IEC 62443-3-3 & IEC 62443-2-1.

10.3 The management of log data and its security must be assigned to an individual.

10.4 The Zonal Railways shall maintain proper visitor records at the control room.

10.5 Policies shall be formulated for proper key management and key register required for opening the RTU Room and panels in SP, SSP and TSS.

10.6 The RTU and Control room shall be physically protected and entry of any unauthorized persons in the RTU and Control room shall be strictly restricted.

10.7 The Zonal Railways shall define procedures for the secure disposal of media containing sensitive data as per IEC 62443-2-1.

10.8 The Railway employees shall be trained about the SCADA firmware security and shall follow secure practices.

10.9 The Firmware integrity verification shall be carried out prior to the firmware update.

10.10 A proper patch management policy shall be adopted based on CLC/TS 50701 and as per IEC 62443-2-3.

10.11 The Zonal Railways shall strictly follow the user login and logout, when a shift is changed.

10.12 Regular reviews of the software and data shall be conducted.

10.13 The Vendor shall provide the following documents to the Zonal Railways for proper maintenance and identification of vulnerabilities or flaws in the Control and Field Network:

A. **Network/ System Design Architecture:** The document shall include the design and Control of Field Network including the device name/type, connection type, communication channel and the security devices so as to identify the unauthorized devices connected in the network and network flaws.

B. **Communication Protocol Document:** The document shall define the communication protocol type and format.

C. **Network Security Policy Document:** This document shall include the following policies and rules:

- Device access policies of field/control level network i.e., using Remote PC/ laptop/ mobile applications etc.
- Access the field/control level network from another network.
- Permission policies for remote access i.e., using password or biometric method to access device.
- Access privilege rules mentioning who can access the device.
- Log management policies to know the activities and users involved in field/control devices.

ANNEXURE 1

GOVERNING SPECIFICATIONS

(A) In addition to specific standards mentioned in the specification the SCADA equipment and components thereof shall generally conform to the latest edition of bureau of Indian Standard Specifications mentioned below:

IS:694 or latest.	PVC (Heavy Duty) insulated electric cables.
IS:1765 or latest.	Direct Current Potentiometers.
IS:3700 or latest.	Essential ratings and characteristics of semiconductor devices.
IS:3895 or latest.	Monocrystalline, semiconductor rectifier cells and stacks.
IS:4007 or latest.	Terminals for electronic equipment.
IS:5051 or latest.	Relays for electronic and telecommunication equipment.
IS:5786 or latest.	Fixed resistors for use in Electronic Equipment.
IS:9521 or latest.	Push-button Type Switches for Automotive Vehicles.
IS:9638 or latest.	Fixed polyester film dielectric capacitor for direct current.
IS:9891 or latest.	Edge connectors for printed wiring board.
IS:10482 or latest.	Connectors for printed wiring board.
IS:2071 or latest.	Techniques for the High voltage Testing
IS:3043 or latest.	Code of practice for earthing
IS/IEC 60898	Electrical accessories-circuit breakers, over current protection
IEC 60529	Ingress Protection Standard
IEC 60870-5-103 & 104 or latest. IEC 60870-5 & IEC 61850 series of standards or latest.	Data Transmission Communication Protocol
EN 62040-1-1, EN 60950 or latest.	Safety Standard for UPS
EN 62040-2, EN 61000-3-2, 3-3, 6-2, 6-4 or latest.	Electromagnetic Compatibility Standard (EMC)
EN 62040-3 or latest.	Performance Standard for UPS
IRS: TC: 55-2006 Rev. 1 with Amendment No. 3 or latest.	24 core underground 68 Armoured OFC cable
IRS TC-14/75, IRS TC 41/97 or latest.	Underground copper cable
IRS TC 30-2005 (Ver.-1) with Amend. No.4. or latest.	Underground copper cable
IRS TC: 22-76 or latest.	Underground copper cable
IEC-61643-12, 61312 & VDE-0100-534 or latest as applicable.	Surge protection
IEEE 802 series of standards or latest.	Ethernet
IEC 62443 series of standards or latest.	Cyber Security for Industrial Automation & Control System (OT Infrastructure).

2337166/2023/O/o PED/TI/RDSO

6143

PD CLC/TS 50701	Technical Specification related to Cyber Security in Railway applications.
IEC 62351 series of standards or latest.	Security handling of TC57 series of protocols including IEC 60870-5 series, IEC 60870-6 series, IEC 61850 series.

The above specifications shall be applied in a manner altered, amended or supplemented by this specification and the latest Indian Electricity Rule wherever applicable. Any deviations from the specifications proposed by the manufacturer to improve the performance, utility or efficiency of the equipment shall be given due consideration provided full details of the deviation are furnished by the manufacturer to the satisfaction of the purchaser. In such cases the manufacturer shall quote according to the specification as well as with the deviations from the specifications.

(B) RDSO REFERENCE SPECIFICATIONS: Manufacturer may refer to following RDSO specifications for clear understanding of the traction system.

TI/SPC/PSI/ISOLTR/0210 or latest.	Specification for 25kV Motorised/Manual and 220/132/110/66kV Double Pole and Triple Pole Isolators for Railway Electric Traction.
TI/SPC/PSI/TRNPWR/4200 or latest.	Technical Specification For (a) 21.6MVA 220kV/2X27kV or 132kV/2X27kV or 110 kV/2X27kV or 66kV/2X27kV, Single Phase Dual LV Winding Traction Power Transformer. (b) 38/53/63MVA, 220kV/2X27.5kV or 132kV/2X27.5kV or 110 kV/2X27.5kV or 66kV/2X27.5kV, Single Phase Dual LV Winding Traction Power Transformer.
TI/SPC/PSI/TRNPWR/5200 or latest.	Technical Specification For 54MVA, ONAN 220kV/2X(2X27) kV and 60/84/100MVA, ONAN/ONAF/OFAF, 220kV/2X55kV or 132/2X55kV or 110/2X55kV or 66/2X55kV Scott Connected Traction Power Transformer.
TI/SPC/PSI/TRNPWR/1200 or latest.	Technical Specification for 8MVA, 12.3MVA & 16.5MVA, ONAN, 55kV/27.5kV Autotransformer.
TI/SPC/PSI/FC&SR/1210 or latest.	Technical Specification for Shunt Capacitor and Series Reactor Equipment For 2x25 kV Feeding System.
ETI/PSI/127(8/89) or latest.	Series capacitor equipment for 2x25 kV `AT' feeding system.
ETI/PSI/128(8/89) with A&C 3 or latest.	Resonance suppressing C-R device for 2x25 kV `AT" feeding System.
TI/SPC/PSI/LVCBIN/0121 or latest.	Technical Specification for 25kV Single pole, Double Pole, Pole mounted, Outdoor Vacuum Circuit Breaker (VCB) and Vacuum Interrupter for Indian Railways.
TI/SPC/PSI/HVCB/0121 or latest.	Technical Specification for 220kV/132kV/110kV/100kV/66kV/55kV Double Pole, Triple Pole Outdoor SF6 Circuit Breaker for Indian Railway.
TI/SPC/PSI/CTs/0210 or latest.	Technical Specification for Current Transformers with CT Ratio of 220kV;400-200/5A & 200-100/5A, 132 kV; 800-400/5A & 400-200/5A, 110kV; 800-400/5A & 400-200/5A 66kV; 1200-600/5A & 800-400/5A 55kV; 1500-750/5A & 200/5A, 25kV; 3000-1500/5A, 1600-800-400/5A, 1500-750/5A, 1000-500/5A, 400-200/5A & 100-50/5A and 11kV; 500/5A for Railway AC Traction Substation.
TI/SPC/PSI/PT/0210 or latest.	Technical Specification for 220kV or 132kV or 110kV or 66kV or 25kV Potential Transformer.
TI/SPC/PSI/PROTCT/6072	Technical specification for control and relay panel for 25 kV

or latest.	AC TSS including specification for numerical type protection relays for traction transformer, 25 kV shunt capacitor bank and transmission line for 25 kV AC TSS on Indian Railways.
TI/SPC/PSI/PROTCT/7101 or latest.	Technical Specification for Control and Relay Panel Including Numerical type protection relays for Scott-connected/V-Connected Single-Phase Traction Transformers, OHE protection, 55 kV AT Protection & Shunt Capacitor Bank Protection for 2x25 kV Traction Sub-station, Sectioning and Paralleling Post, Sub-Sectioning & Paralleling Post and Auto Transformer Post.
TI/SPC/PSI/PROTCT/4050 or latest.	Technical specification for Control and Relay Panel for Protection System for 50 Hz AC Traction Power Supply System including Parallel Operation on 25 KV Side.
IS/RDSO-TI/0002:2022 or latest.	Technical specification for Power Quality Restorer for 25 kV and 2x25 kV AC Traction Power Station.
TI/SPC/PSI/200-250 CHGR/ 0210 or latest.	Technical specification for battery charger for 110 volt battery, 200/250 Ah at traction sub-station for 25 kV/ 2x25kV electric traction installation.
TI/SPC/PSI/40-150 CHGR/ 1210 or latest.	Technical specification for battery charger for 110 volt battery, 150 Ah (for 2x25 kV)/40 Ah (for 25kV) at SP/SSP for electric traction installation.
TI/SPC/PSI/ERTHNG/0210, Rev. 02 or latest.	Technical Specification for Earthing of power supply installation for 25 and 2x25 kV, AC, 50 Hz single phase traction system.
IRS-TC 68 or latest.	Multiplexing equipment.
TI/IN/0043 Rev.01 or latest.	PSI guideline for increasing speed potential to 160 kmph on NDLS-HWH & NDLS-BCT routes.

(C) OTHER GUIDELINES:

CEA (Cyber Security in Power Sector) Guidelines, 2021 or latest by Ministry of Power, Government of India.

ANNEXURE 2

SCHEDULE OF GURANTEED PERFORMANCE

The manufacturer shall be required to submit the following detail to the purchaser and also confirm point wise deviation to each clause of the tender paper so as to help the purchaser to evaluate the technical capability of the manufacturer to carry out the work. Wherever deviations are quoted they shall be supposed to be supported with detailed technical benefits and/or financial benefits. In case no comments are given by the manufacturer for this section or a particular item of the section/Annexures, it is deemed to be considered by the purchaser that the manufacturer has understood the detailed technical requirement of the specification and there are no deviations to the specifications.

1. Maker's name and country of origin.
2. Are you an RDSO approved vendor for supply of SCADA system to Indian Railway? Enclose necessary approvals with valid certificate to this extent.
3. Have you supplied earlier SCADA system to IR. If yes, quote the projects with completion certificates.
4. Whether the manufacturer agrees to supply the product as per this specification. In case of disagreement or better proposals please mention point wise the clauses which are not acceptable with reasons.
5. Technical details, ratings, make & model number of the computers and peripherals at the RCC. (enclose relevant datasheets, features and brochures)
6. Technical details, make, ratings & model No. of the UPS being provided at the RCC. (enclose relevant datasheets, features and brochures)
7. Technical details, make, ratings & model No. of the UPS battery set. (Enclose relevant datasheets, features and brochures).
8. Technical details of the RTU along with CPU, DI, DO & AI cards, operating voltage ratings, dimensional details of RTU
9. Technical details, ratings, make & model number of the power supply units used in RTU (enclose relevant datasheets, features and brochures).
10. Technical details, ratings, make & model number of the contactors used at RCC and at RTU (enclose relevant datasheets, features and brochures)

Testing instruments

11. Multi-meter
    a) Make and type
    b) Other detailed particulars , along with technical pamphlets
12. LAN Tester
    a) Make and type
    b) Other detailed particular along with technical pamphlets.
13. Do you confirm that you will take AMC of SCADA system as stipulated in specification and provide spares, maintenance support and software up gradation even after AMC period?

GENERAL ARRANGEMENT OF MASTER STATION COMPUTERS

ANNEXURE-3

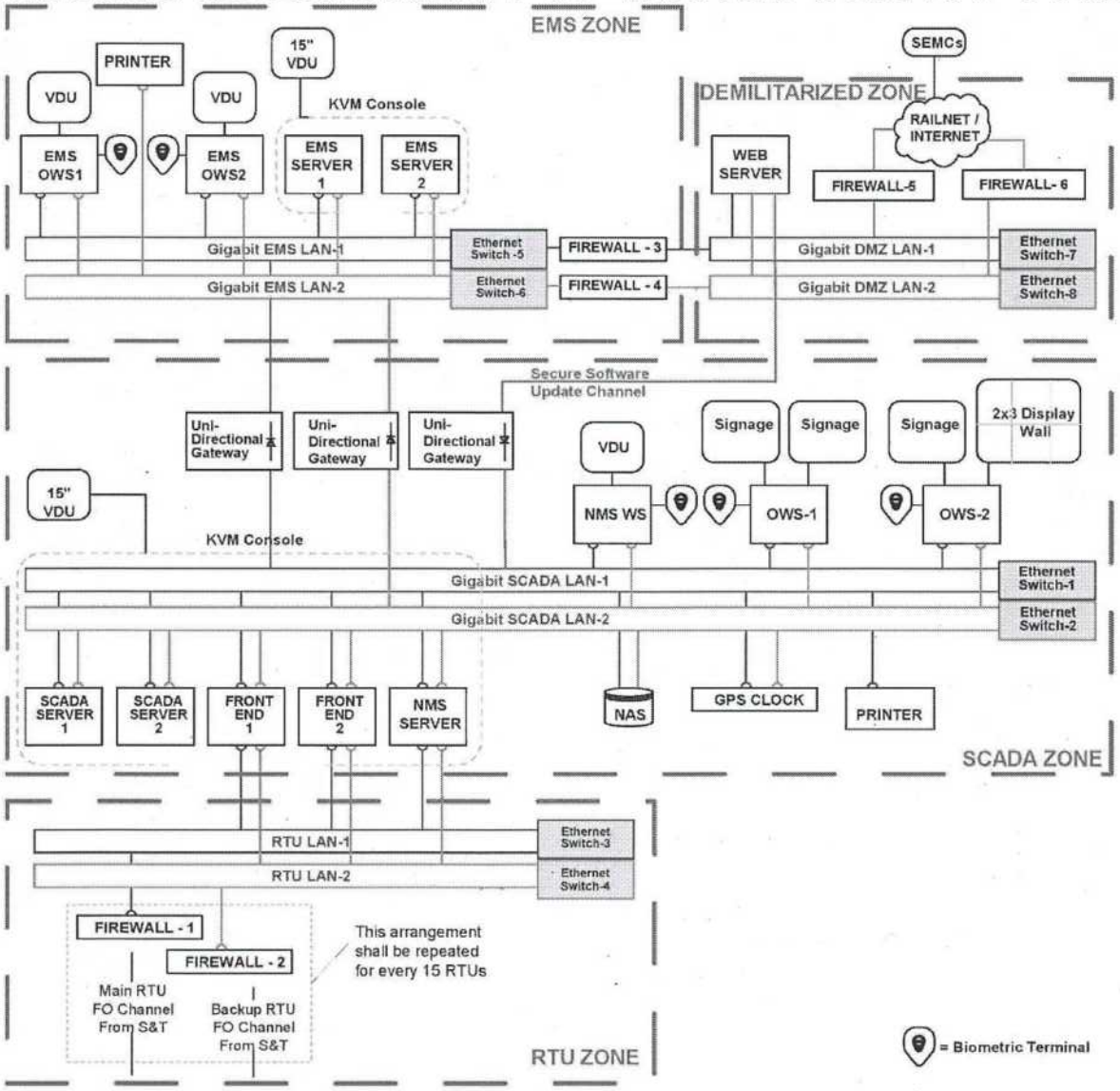

	Prepared By	Checked By	Issued by
Signature	Vikash	[signature] 09/11/23	[signature] 09/11/23
Date	09.11.2023		
Designation	JE/ TI	ADE/ TI-3	DIRECTOR/ TI-3

ANNEXURE-4

POINT ADDRESS MAPPING INFORMATION FOR IEC 60870-5-103 PROTOCOL

Configuration for Digital Inputs

ALARM LIST FOR TRANSFORMER

Sr. No.	Alarm List	Type	SP/DP	IOA	FUN	INF	Source	No Of Relays	25kV	SUB - URB	2X25 kV
1	Diff Operated	Alarm	SP	101	176	69	Transformer Differential Relay	2	R	R	R
2	Buchholz Trip	Alarm	SP	102	176	27			R	R	R
3	Oil Temp. Trip	Alarm	SP	103	176	28			R	R	R
4	WDG Temp. Trip	Alarm	SP	104	176	29			R	R	R
5	PRD Trip	Alarm	SP	105	176	30			R	R	R
6	DSS Closed	Alarm	SP	106	127	31			R	R	R
7	HIS Closed	Alarm	SP	107	127	32			R	R	R
8	Tap changer PRD trip	Alarm	SP	108	127	33			S	S	R
9	Protection relay healthy	Alarm	SP	109	176	18			R	R	R

Note: For second Transformer add 20 to IOA address 121 – 129

ALARM LIST FOR HV OC Relay

Sr. No.	Alarm List	Type	SP/DP	IOA	FUN	INF	Source	No Of Relays	25kV	SUB - URB	2X25 kV
1	OC HV Operated	Alarm	SP	141	160	68	HV Over Current Protection Relay	2	R	R	R
2	REF/EF Operated	Alarm	SP	142	160	93			R	R	R
3	Buch. Alarm/WDG Alarm	Alarm	SP	143	160	27			R	R	R
4	OTI Alarm/Low Oil Alarm	Alarm	SP	144	160	28			R	R	R
5	APGP-Low Alarm	Alarm	SP	145	160	29			R	R	R
6	APGP-Low Trip	Alarm	SP	146	160	30			R	R	R
7	Trip Ckt. Fail HV CB	Alarm	SP	147	160	36			R	R	R
8	CB NC (HV CB Open)	Status	DP	148	127	124			R	R	R
9	CB NO (HV CB Close)				127	125			R	R	R
10	Protection Relay Healthy	Alarm	SP	150	160	18			R	R	R

Note: For second Transformer add 20 to IOA address 161 -170

ALARM LIST FOR LV OC Relay

Sr. No.	Alarm List	Type	SP/DP	IOA	FUN	INF	Source	No Of Relays	25kV	SUB - URB	2X25 kV
1	OC LV Operated	Alarm	SP	181	160	68	LV Over current Protection Relay	2	R	R	R
2	REF Operated	Alarm	SP	182	160	93			R	R	S
3	Buch. Alarm/WDG Alarm	Alarm	SP	183	160	27			R	R	R
4	OTI Alarm/Low Oil Alarm	Alarm	SP	184	160	28			R	R	R
5	AP/GP-Low Alarm	Alarm	SP	185	160	29			R	R	R
6	AP/GP-Low Trip	Alarm	SP	186	160	30			R	R	R
7	Trip Ckt.. Fail LV CB	Alarm	SP	187	160	36			R	R	R
8	CB NC (LV CB Open)	Status	DP	188	127	124			R	R	R
9	CB NO (LV CB Close)				127	125			R	R	R
10	Protection Relay Healthy	Alarm	SP	190	160	18			R	R	R

Transformer-1 Over Current Protection for Main LV 181 - 190

Transformer-1 Over Current Protection for Teaser LV 201 - 210

Transformer-2 Over Current Protection for Main LV 221 - 230

Transformer-2 Over Current Protection for Teaser LV 241 - 250

Note: 4 Relays only for 2x25KV i.e. Main & Teaser

ALARM LIST FOR PHASE FAILURE

Sr. No.	Alarm List	Type	SP/DP	IOA	FUN	INF	Source	No Of Relays	25 kV	SUB-URB	2X25 kV
1	Ph. Fail Main Winding	Alarm	SP	261	160	91	Phase Failure Relay	2	S	S	R
2	Ph. Fail Teaser Winding	Alarm	SP	262	160	93			S	S	R
3	Protection Relay Healthy	Alarm	SP	263	160	18			S	S	R

Note: for Line2 Phase failure Relay IOA 266 – 268

ALARM LIST FOR FEEDER

Sr. No.	Alarm List	Type	SP/ DP	IOA	FUN	INF	Source	No of Relays	25 kV	SUB-URB	2X25kV
1	Trip Ckt.. Sup.	Alarm	SP	271	128	36	Feeder Protection Relay	2	R	R	R
2	PT Fuse Failure	Alarm	SP	272	128	38			R	R	R
3	PTFF Trip	Alarm	SP	273	128	38			R	R	R
4	General Pick up	Alarm	SP	274	128	84			R	R	R
5	Zone 1	Alarm	SP	275	128	78			R	R	R
6	Zone 2	Alarm	SP	276	128	79			R	R	R
7	Zone 3	Alarm	SP	277	128	80			R	R	R
8	Breaker Failure	Alarm	SP	278	128	85			R	R	R
9	WPC	Alarm	SP	279	126	100			R	R	R
10	Trip I>	Alarm	SP	280	128	90			R	R	R
11	Trip I>>	Alarm	SP	281	128	91			S	R	R
12	Trip I>>>	Alarm	SP	282	126	104			S	R	R
13	SOTF	Alarm	SP	283	126	106			R	R	R
14	Lock-Out	Alarm	SP	284	126	107			R	R	R
15	ARR Operated	Alarm	SP	285	127	125			R	R	R
16	CB NC (Feeder CB Open)	Status	DP	286	127	136			R	R	R
17	CB NO (Feeder CB Close)				127	137			R	R	R
18	Reclose Block	Alarm	SP	288	128	27			R	R	R
19	Remote Lock-Out	Alarm	SP	289	128	28			R	R	R
20	Zone-1 Extension	Alarm	SP	290	128	29			R	R	R
21	AP/GP-Low Alarm	Alarm	SP	291	128	30			R	R	R
22	AP/GP Trip	Alarm	SP	292	127	31			R	R	R
23	Thermal Over load	Alarm	SP	293	126	202			S	S	R
24	Protection Relay Healthy	Alarm	SP	294	128	18			R	R	R

Note: Feeder Protection Relay for Feeder 2 IOA 311 - 334

Note: Feeder Protection Relay for Feeder 3 IOA 351 - 374

Note: Feeder Protection Relay for Feeder 4 IOA 391 - 414

Note: 4 Relays only for 2x25KV and SUB-URB as per no. of Lines.

	Prepared By	Checked By	Issued by
Signature	Vikash		
Date	09.11.2023	09.11.23	09/11/23
Designation	JE/ TI	ADE/ TI-3	DIRECTOR/ TI-3

Vectorial Delta Relay

S.N.	Alarm List	Type	SP/ DP	IOA	FUN	INF	Source	No of Relays	25 kV	SUB-URB	2X25kV
1	UV Operated	Alarm	SP	431	126	116	Delta - I Back up Relay	2	R	R	R
2	Backup DPR Operated	Alarm	SP	432	127	138			R	R	R
3	BF Operated	Alarm	SP	433	126	85			R	R	R
4	Vectorial Delta-I Relay Operated	Alarm	SP	434	126	118			R	R	R
5	Vectorial Delta-I Relay Healthy	Alarm	SP	435	127	18			R	R	R

Note: Feeder Protection Relay for Feeder 2 IOA 441 - 445

Note: Feeder Protection Relay for Feeder 3 IOA 451 - 455

Note: Feeder Protection Relay for Feeder 4 IOA 461 - 465

Note: 4 Relays only for 2x25KV and SUB-URB as per no. of Lines.

Over current/Unbalance Relay for Capacitor Bank

Sr. No.	Alarm List	Type	SP/ DP	IOA	FUN	INF	Source	No of Relays	25 kV	SUB-URB	2X25kV
1	Over Current 1 Operated	Alarm	SP	471	126	103	Over current/Unbalance Relay for Capacitor Bank	1	R	R	R
2	Over Current 2 Operated	Alarm	SP	472	126	105			S	S	R
3	Current Unbalance 1 Operated	Alarm	SP	473	126	146			R	R	R
4	Current Unbalance 2 Operated	Alarm	SP	474	126	147			S	S	R
5	CB AP/GP Low Alarm	Alarm	SP	475	160	29			R	R	R
6	CB AP/GP Low Trip & Lock	Alarm	SP	476	160	30			R	R	R
7	Trip Ckt..Fail	Alarm	SP	477	160	36			R	R	R
8	Protection Relay Healthy	Alarm	SP	478	160	18			R	R	R
9	Capacitor Bank CB Close	Alarm	DP	479	127	137			R	R	R
10	Capacitor Bank CB Open	Alarm			127	136			R	R	R

Note: Current Unbalance - Cap Bank – 2 491 – 500

Over/ Under Voltage Protection. Relay for Capacitor Bank

Sr. No.	Alarm List	Type	SP/DP	IOA	FUN	INF	Source	No Of Relays	25kV	SUB - URB	2X25 kV
1	Over Voltage	Alarm	SP	511	126	131	Over/ Under Voltage Protection. Relay for Capacitor Bank	1	R	R	R
2	Under Voltage	Alarm	SP	512	126	116			R	R	R
3	Unbalance Volt.1.Optd.	Alarm	SP	513	126	165			R	R	R
4	Unbalance Volt.2 Optd.	Alarm	SP	514	126	175			S	S	R
5	.Protection Relay	Alarm	SP	515	128	18			R	R	R
6	Trip Ckt Fail.	Alarm	SP	516	160	36			R	R	R

Note: Under Voltage - Cap Bank – 2 521 - 526

SYNC CHECK RELAY

Sr.No.	Alarm List	Type	SP/DP	IOA	FUN	INF	Source	No of Relays	25kV	SUB-URB	2X25 kV
1	Sync OK	Alarm	SP	531	126	111	Sync Check Relay	2	S	R	S
2	UV operated	Alarm	SP	532	126	116			S	R	S

Note: Sync Check for Line 2 536 - 537

REVERSE POWER RELAY

Sr. No.	Alarm List	Type	SP/DP	IOA	FUN	INF	Source	No of Relays	25 kV	SUB-URB	2X25 kV
1	Trip Relay	Alarm	SP	541	127	92	Reverse Power Relay	2	S	R	S
2	General Trip	Alarm	SP	542	126	68			S	R	S
3	Trip -L1	Alarm	SP	543	126	69			S	R	S
4	Gen. Start/Pkp	Alarm	SP	544	126	84			S	R	S
5	Trip I>	Alarm	SP	545	126	90			S	R	S

Note: Reverse Power for Line 2 551-557

LV BusBar Protection

Sr. No.	Alarm List	Type	SP/DP	IOA	FUN	INF	Source	No Of Relays	25kV	SUB-URB	2X25kV
1	General Trip	Alarm	SP	561	160	68	LV Bus Bar Protection	2	S	R	S
2	CB NC (CB Open)	Status	DP	562	127	124			S	R	S
3	CB NO (CB Close)				127	125			S	R	S

Note: Bus Bar Relay for Line 2 566-568

	Prepared By	Checked By	Issued by
Signature	Vikash		
Date	09.11.2023	09.11.23	9/11/23
Designation	JE/ TI	ADE/ TI-3	DIRECTOR/ TI-3

Panto Flashover Relay and catenary indication

Sr. No.	Alarm List	Type	SP/ DP	IOA	FUN	INF	Source	No of Relays	25kV	SUB-URB	2X25 kV
1	CAT - 1	Status	SP	571	127	130	Panto Flashover / Hard Wired	1	R	R	S
2	CAT - 2	Status	SP	572	127	131			R	R	S
3	CAT - 3	Status	SP	573	127	132			R	R	S
4	CAT - 4	Status	SP	574	127	133			R	R	S
5	General trip	Alarm	SP	575	126	68			R	R	S
6	Panto relay bypass	Alarm	SP	576	127	134			R	R	S

Note: FUN & INF no. applicable only when Panto flashover relay available, otherwise hard wiring shall be provided.

DC Supervision Relay

Sr. No.	Alarm List	Type	SP/ DP	IOA	FUN	INF	Source	No of Relays	25 kV	SUB-URB	2X25 kV
1	240V AC High	Alarm	SP	601	126	240	DC Monitoring Relay	2	R	R	R
2	240V AC Low	Alarm	SP	602	126	239			R	R	R
3	110 DC Over Voltage Alarm	Alarm	SP	603	126	237			R	R	R
4	110 DC Under Voltage Trip	Alarm	SP	604	126	238			R	R	R
5	110 DC Under voltage Alarm	Alarm	SP	605	126	234			R	R	R
6	Protection Relay Healthy	Alarm	SP	606	128	18			R	R	R

Note: Feeder Protection Relay for Feeder 2 IOA 607 - 612

TRANSFORMER TAP

Sr. No.	Alarm List	Type	SP/ DP	IOA	FUN	INF	Source	No of Relays	25kV	SUB-URB	2X25 kV
1	TAP - 1	Status	SP	621	-	-	Hard Wired	2	R	R	R
2	TAP - 2	Status	SP	622	-	-			R	R	R
3	TAP - 3	Status	SP	623	-	-			R	R	R
4	TAP - 4	Status	SP	624	-	-			R	R	R
5	TAP - 5	Status	SP	625	-	-			R	R	R
6	TAP - 6	Status	SP	626	-	-			R	R	R

Note: Transformer No.2 - Tap Positions 627-632.
Transformer No.3 - Tap Positions 633-638.

	Prepared By	Checked By	Issued by
Signature	Vikash		
Date	09.11.2023	09/11/23	09/11/23
Designation	JE/ TI	ADE/ TI-3	DIRECTOR/ TI-3

TRANSFORMER COOLING FAN Status

Sr. No.	Alarm List	Type	SP/ DP	IOA	FUN	INF	Source	No of Relays	25kV	SUB-URB	2X25 kV
1	Cooling Fan - 1	Status	SP	641	-	-	Hard Wired (HW)	-	R	R	R
2	Cooling Fan - 2	Status	SP	642	-	-			R	R	R
3	Cooling Fan - 3	Status	SP	643	-	-			R	R	R
4	Cooling Fan - 4	Status	SP	644	-	-			R	R	R
5	Cooling Fan - 5	Status	SP	645	-	-			R	R	R
6	Cooling Fan - 6	Status	SP	646	-	-			R	R	R
7	Cooling Fan - 7	Status	SP	647	-	-			R	R	R
8	Cooling Fan - 8	Status	SP	648	-	-			R	R	R

Note: Transformer No. 2 - Cooling Fan Status 651- 656.
Transformer No. 3 - Cooling Fan Status 661- 666.

TRANSFORMER OIL PUMP

Sr. No.	Alarm List	Type	SP/ DP	IOA	FUN	INF	Source	No of Relays	25kV	SUB-URB	2X25 kV
1	Oil Pump - 1	Status	SP	671	-	-	HW	-	R	R	R
2	Oil Pump - 2	Status	SP	672	-	-			R	R	R

Note : Transformer No. 2 – Oil Pump Status 675- 676.
Transformer No. 3 – Oil Pump Status 679- 680.

BUS COUPLER

Sr. No.	Alarm List	Type	SP/ DP	IOA	FUN	INF	Source	No Of Relays	25kV	SUB-URB	2X25 kV
1	Bus Coupler - HV NO	Status	DP	701	-	-	Hard Wired (HW)	-	R	R	
2	Bus Coupler - HV NC				-	-			R	R	
3	BUS Coupler - LV NO	Status	DP	703	-	-			R	R	R
4	BUS Coupler - LV NC				-	-			R	R	R
5	BUS Coupler (BX) - NO	Status	DP	705	-	-			R	R	
6	BUS Coupler (BX) - NC				-	-			R	R	

Configuration for Digital Outputs

Sr. No.		Type	SC/ DC	IOA	FUN	INF	Source	No of Relays	25kV	SUB-URB	2X25kV

	Prepared By	Checked By	Issued by
Signature	Vikash		
Date	09.11.2023	09.11.23	09/11/23
Designation	JE/ TI	ADE/ TI-3	DIRECTOR/ TI-3

	For Feeder										
1.	Lockout/ Relay Reset	Command	SC	2102	128	19	Feeder Protection Relay	4	R	R	R

Note: For Feeder 2: IOA-2104
For Feeder 3: IOA -2106
For Feeder 4:IOA-2108

For Second Transformer IOA- 2130

	For Transformer LV										
1	RELAY RESET	Command	SC	2138	160	19	LV Overcurrent Protection Relay	2	R	R	R
	For Transformer HV										
1	RELAY RESET	Command	SC	2128	160	19	HV Overcurrent Protection Relay	2	R	R	R

	Hardwired								25kV	SUB-URB	2X25kV
3	Raise Tap Changer of TR1	Command	SC	2250	-	-	Hardwired		R	R	R
4	Lower Tap changer of TR1	Command	SC	2251	-	-			R	R	R
5	Raise Tap Changer of TR2	Command	SC	2252	-	-			R	R	R
6	Lower Tap changer of TR2	Command	SC	2253	-	-			R	R	R
7	Bypass Panto Flashover	Command	SC	2254	-	-			R	R	S
8	Interrupter	Command	DC	2255	-	-			R	R	R

	Prepared By	Checked By	Issued by
Signature			
Date	09.11.2023	09/11/23	09/11/23
Designation	JE/ TI	ADE/TI-3	DIRECTOR/ TI-3

	1										
9	Interrupter 5	Command	DC	2272	-	-			R		
10	Feeder CB	Command	DC	2100	-	-			R	R	R
11	HV CB	Command	DC	2126	-	-			R	R	R
12	LV CB	Command	DC	2136	-	-			R	R	R

The number of CBs depends on type of layout and power supply feeding system, vendor shall use suitable IOA as per requirement.

Configuration for Measurands List of AI (Parameters available from the Relays)

Sr. No.		Type	SC/ DC	IOA	FUN	INF	Source	No of Relays	25k V	SUB-URB	2X25kV
	For Feeder										
1	Current	Measurand		1600	128	145	Feeder Protection Relay	4	R	R	R
2	Voltage	Measurand		1601	128	145			R	R	R
3	Fault Reactance (x)	Measurand		1602	128	73			R	R	R
13	Fault Resistance (R)	Measurand		1603	128	75			R	R	R
14	For Feeder 2 IOA: 1605 to 1609										
15	For Feeder 3 IOA:1610 to 1614										
16	For Feeder 4 IOA: 1615 to 1620										
Sr. No.		Type	SC/ DC	IOA	FUN	INF	Source	No of Relays	25k V	SUB-URB	2X25kV
	For Transfoemer										
1	Current	Measurand		1621	176	144	Over Current Relay	2	R	R	R
2	Current	Measurand		1622	176	150			R	R	R
	For Transformer 2 IOA: 1625 to								R	R	R

	Prepared By	Checked By	Issued by
Signature	Vikash		
Date	09.11.2023	09.11.23	09/11/23
Designation	JE/ TI	ADE/ TI-3	DIRECTOR/ TI-3

	1628										

Incomer (From Meter)

				IOA		
	Voltage	Measurand		1629		
	Current	Measurand		1630		
	Power Factor	Measurand		1631		
	Power (Active)	Measurand		1632		
	Power (Reactive)	Measurand		1633		
	Power (Apparent)	Measurand		1634		
	Maximum Demand	Measurand		1635		
	Energy (Import)	Measurand		1636		
	Energy (Export)	Measurand		1637		
	For Feeder 2 IOA: 1638 to 1647					
	For Feeder 3 IOA: 1648 to 1656					
	For Feeder 4 IOA: 1657 to 1666					

Incomer 1 (From Meter)

S. No.	Parameter	Type		IOA			
1	Voltage	Measurand		1631			Meter
2	Current	Measurand		1632			
3	Power Factor	Measurand		1633			
4	Power (Active)	Measurand		1634			
5	Power (Reactive)	Measurand		1635			
6	Power (Apparent)	Measurand		1636			
7	Maximum Demand	Measurand		1637			
8	Energy (Import)	Measurand		1638			
9	Energy (Export)	Measurand		1639			
10	Line Frequency	Measurand		1640			
For Incomer 2 IOA: 1641 to 1650							

List of AI (Parameters to be Hard Wired)

Sr. No.	Parameter	Type	SP/ DP	IOA	FUN	INF	Source	No of transformer Bays	25kV	SUB - URB	2X25 kV
1	HV Winding Temperature	Measurand	SP	1671			Hard Wired	2	R	R	R
2	LV Winding Temperature	Measurand	SP	1672					R	R	R
3	REG. Winding Temperature	Measurand	SP	1673					R	R	R
4	Oil Temperature	Measurand	SP	1674					R	R	R

Note: Bus Bar Relay for Line 2 1681-1684

Please Note:

- IEC 60870-5-104 configurable parameters for compatibility:

1. IOA size 3 byte
2. Common add ASDU 2 byte
3. Link address 2 byte
4. ASDU Address 2 byte
5. COT 2 byte
6. MAX APDU is to be as per maximum frame length of 253
7. Transfer of load profiles from RTU to EMS shall be using transparent file transfer functions defined in IEC 60870-5-104. The format of the file shall be as per MIOS CDF format.

- Events to be reported using 'M_SP_TB_1' & 'M_DP_TB_1'. Multiple events to be reported in a single frame, improving communication speed.
- Double command C_DC_NA_1. Single Command C_SC_NA_1.
- GI should be reported using: 'M_SP_NA_1' & 'M_DP_NA_1'.
- Analog values to be reported using 'M_ME_NC_1'.
- Energy counters to be reported using 'M_IT_NA_1'.

Note: For communication between RTU and relays on IEC 61850 protocol, SCADA vendor shall also configure above list along with any other new points as per IEC 61850 protocol standard.

ANNEXURE -5

PROTECTION SCHEME FOR PROPOSED 25 kV TSS

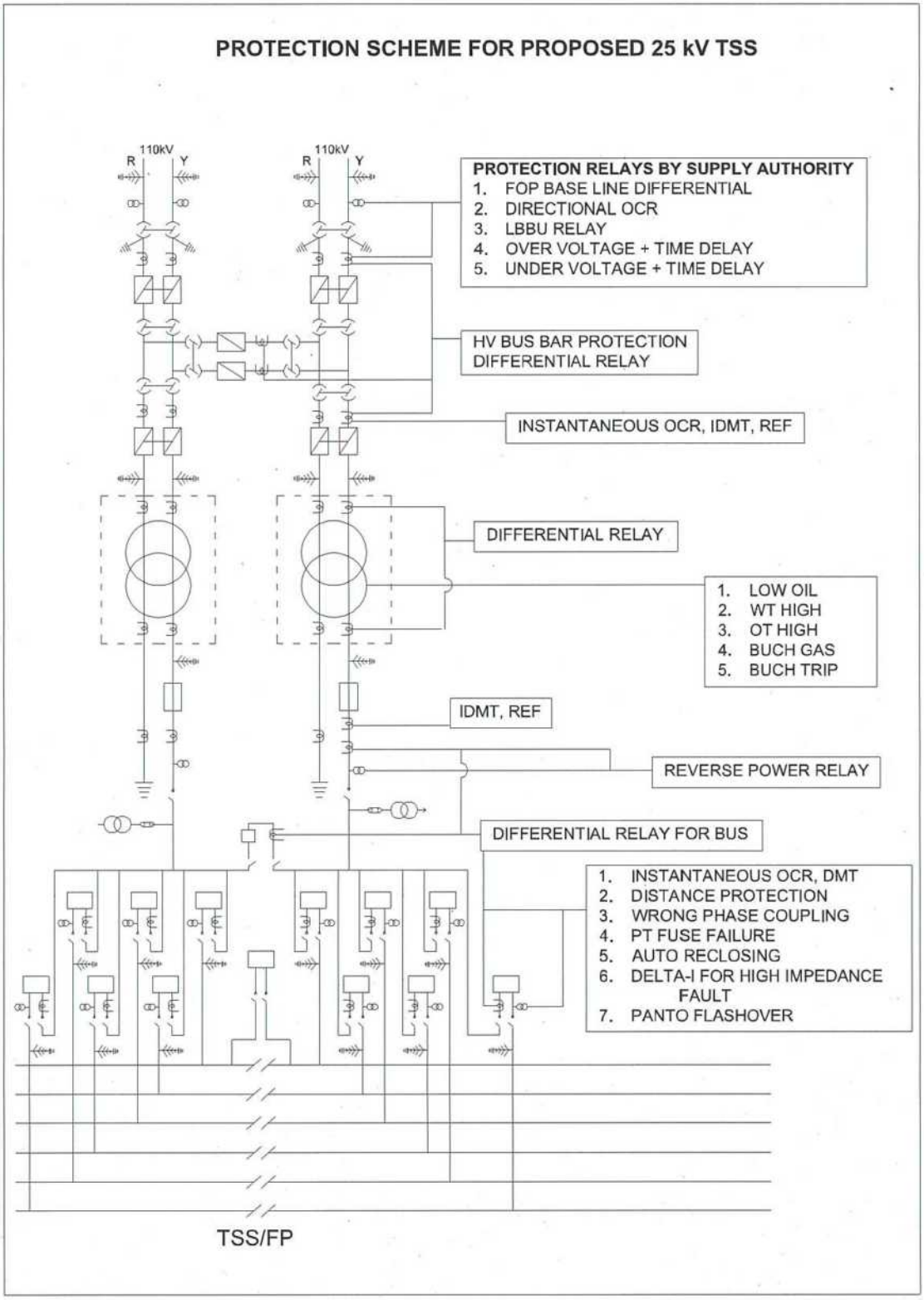

	Prepared By	Checked By	Issued by
Signature	Vikash		
Date	09.11.2023	09/11/23	09/11/23
Designation	JE/ TI	ADE/ TI-3	DIRECTOR/ TI-3

ANNEXURE 6

TRACTION SUPPLY ARRANGEMENT OF SUB URBAN AREA

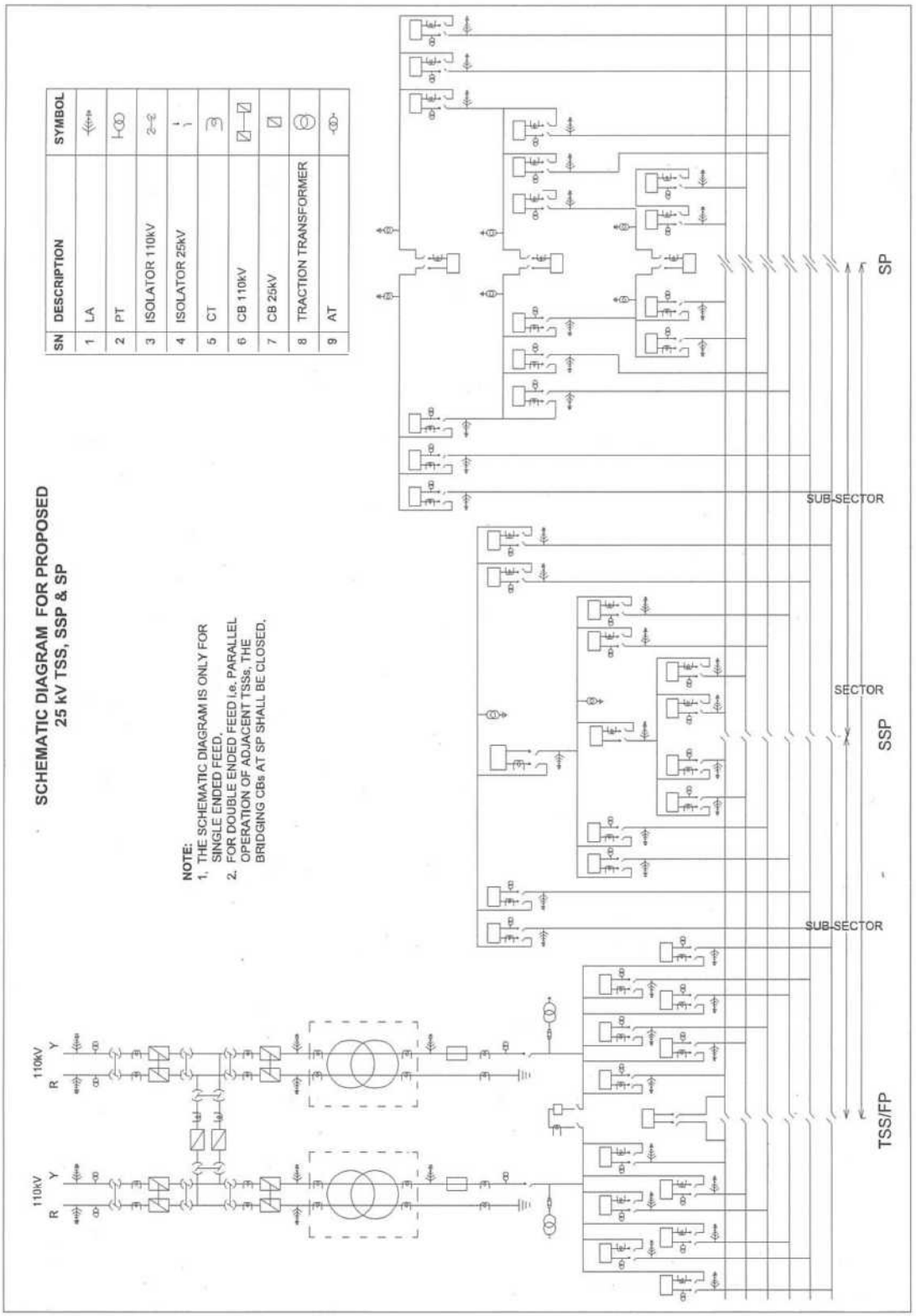

	Prepared By	Checked By	Issued by
Signature	Vikash		
Date	09.11.2023	09.11.23	09/11/23
Designation	JE/ TI	ADE/ TI-3	DIRECTOR/ TI-3

ANNEXURE- 7

GENERAL SCHEME OF SUPPLY FOR 25kV 50Hz SINGLE PHASE TRACTION SYSTEM

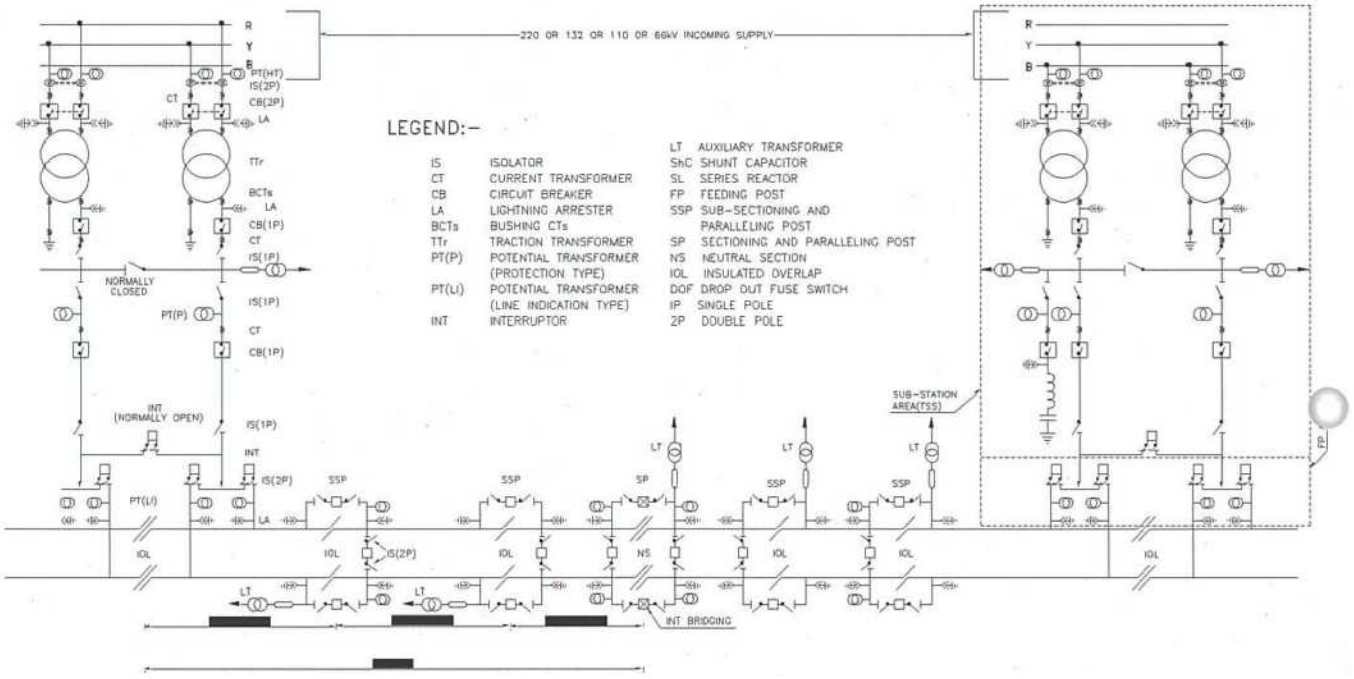

LEGEND:–

IS	ISOLATOR	LT	AUXILIARY TRANSFORMER
CT	CURRENT TRANSFORMER	ShC	SHUNT CAPACITOR
CB	CIRCUIT BREAKER	SL	SERIES REACTOR
LA	LIGHTNING ARRESTER	FP	FEEDING POST
BCTs	BUSHING CTs	SSP	SUB-SECTIONING AND PARALLELING POST
TTr	TRACTION TRANSFORMER	SP	SECTIONING AND PARALLELING POST
PT(P)	POTENTIAL TRANSFORMER (PROTECTION TYPE)	NS	NEUTRAL SECTION
PT(LI)	POTENTIAL TRANSFORMER (LINE INDICATION TYPE)	IOL	INSULATED OVERLAP
INT	INTERRUPTOR	DOF	DROP OUT FUSE SWITCH
		IP	SINGLE POLE
		2P	DOUBLE POLE

	Prepared By	Checked By	Issued by
Signature	Vikash		
Date	09.11.2023	09/11/2023	09/11/23
Designation	JE/ TI	ADE/ TI-3	DIRECTOR/ TI-3

ANNEXURE- 8

Schematic of Scott Connected 2X25 KV TSS for two line

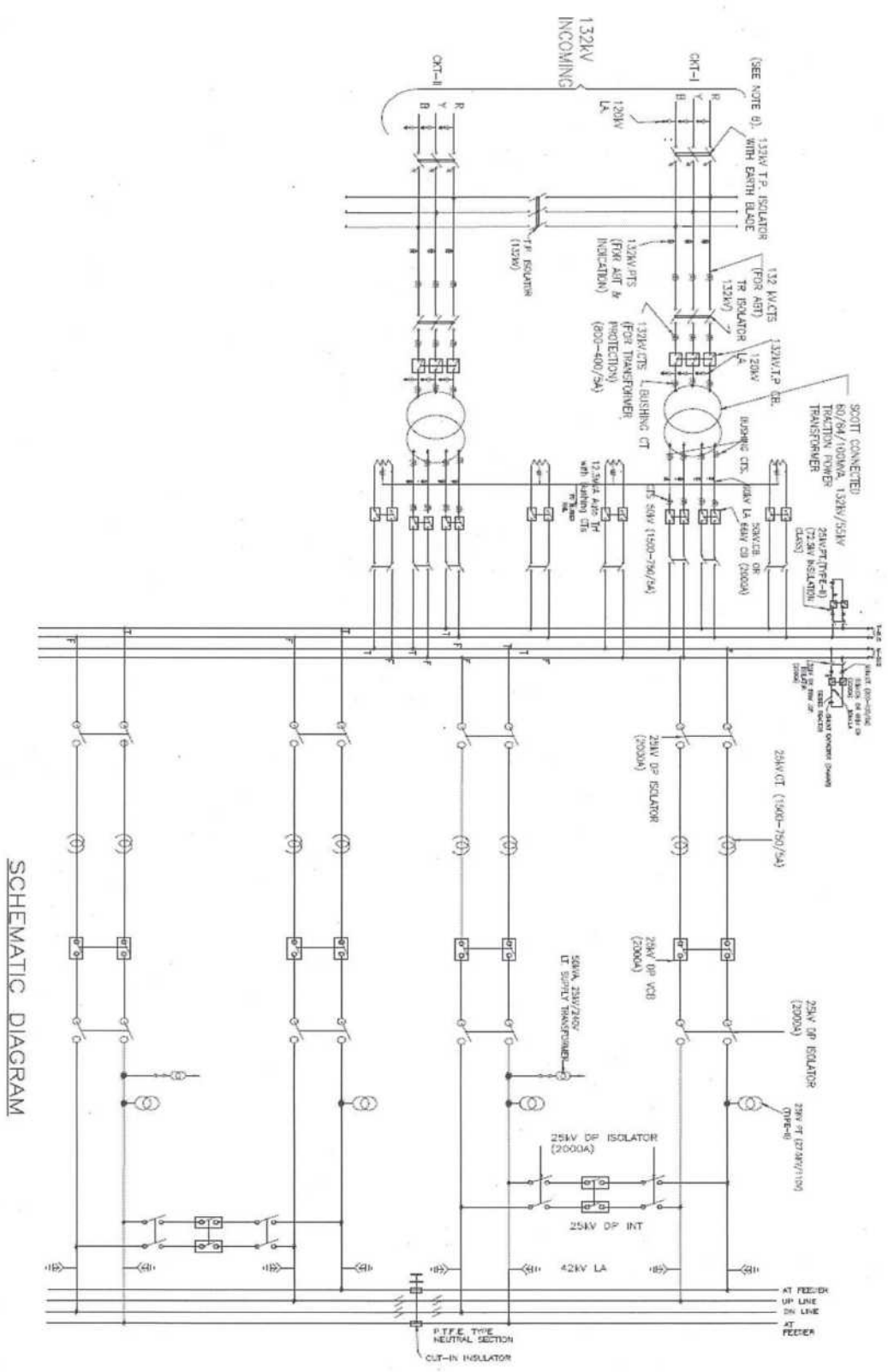

	Prepared By	Checked By	Issued by
Signature	Vikash		
Date	09.11.2023	09.11.23	09/11/23
Designation	JE/ TI	ADE/ TI-3	DIRECTOR/ TI-3

Schematic of 2x25 kV SSP for two line section

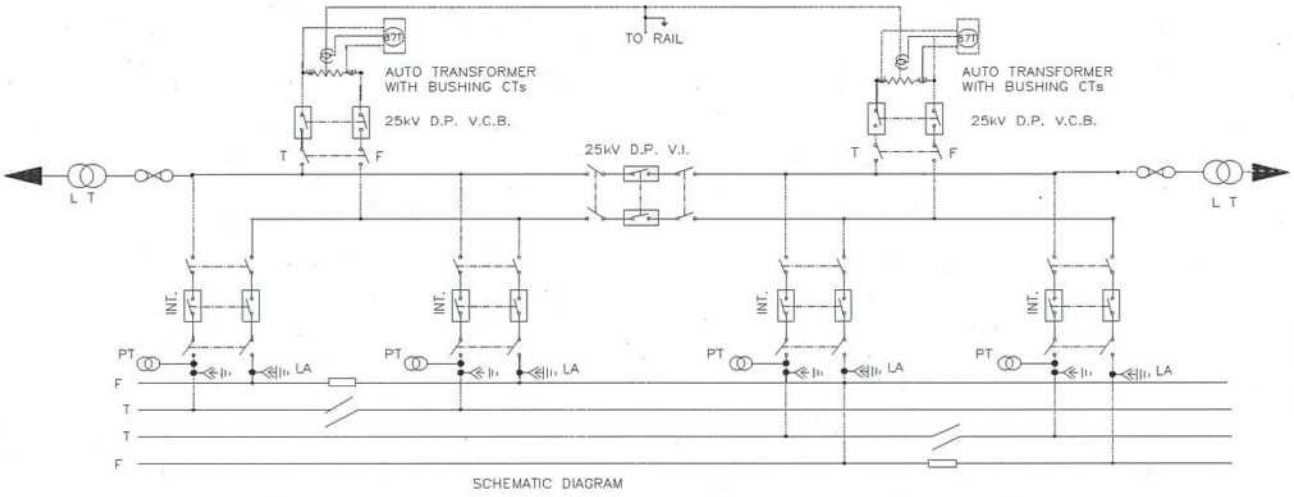

SCHEMATIC DIAGRAM

Schematic of 2x25 kV SP for two line section

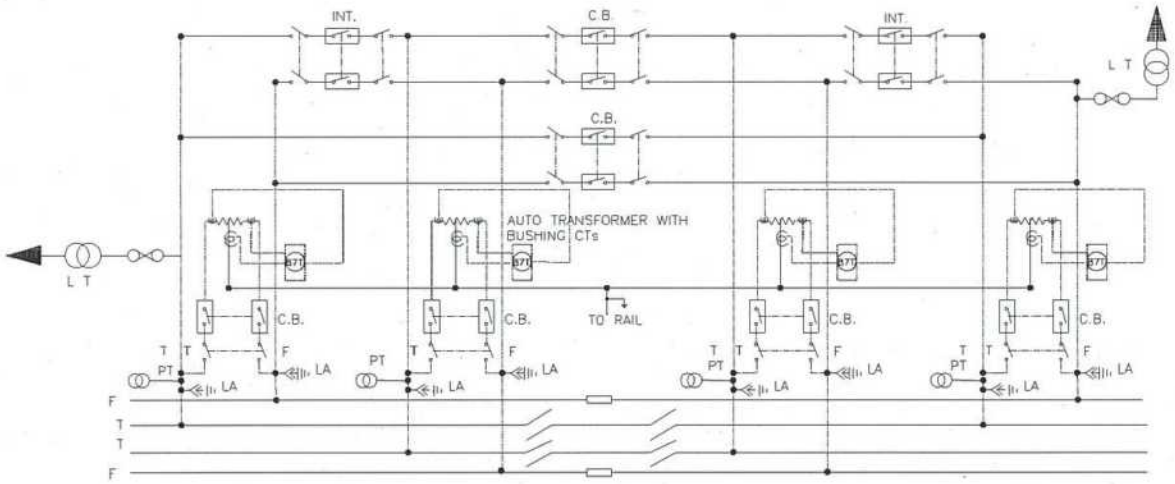

	Prepared By	Checked By	Issued by
Signature	Vikash		
Date	09-11-2023	09/11/23	09/11/23
Designation	JE/ TI	ADE/ TI-3	DIRECTOR/ TI-3

ANNEXURE- 9

PROTOCOL – Diagnostic, Downloading, etc.

3.2.7.1 RTU Diagnostics

ASDU for RTU Diagnostics in Control direction

TYPE IDENT 220: Request RTU Diagnostics
Single information object (SQ=0)

220	Type Identification
1	Variable Structure Qualifier
Defined in 7.2.3 of IEC 60870-5-101/104	Cause Of Transmission
Defined in 7.2.4 of IEC 60870-5-101/104	Common Address of ASDU
Defined in 7.2.5 of IEC 60870-5-101/104	Information Object Address = 0

Cause of Transmission used with TYPE IDENT 220
In control direction
<5> := request
In monitor direction
<44> := unknown type identification
<45> := unknown cause of transmission
<46> := unknown common address of ASDU
<47> := unknown information object address

ASDU for RTU Diagnostics in monitor direction

TYPE IDENT 221: RTU Diagnostics with time tag CP56Time2a
Single information object (SQ=0)

221	Type Identification
1	Variable Structure Qualifier
Defined in 7.2.3 of IEC 60870-5-101/104	Cause Of Transmission
Defined in 7.2.4 of IEC 60870-5-101/104	Common Address of ASDU
Defined in 7.2.5 of IEC 60870-5-101/104	Information Object Address = 0
RTU Diagnostics Note 1	Status Of RTU
RTU Diagnostics Note 2	Diagnostics result Note 1
RTU Diagnostics Note 3	Diagnostics result Note 2
RTU Diagnostics Note 4	Number of IED/ Cards
RTU Diagnostics Note 5: IED Health byte 1	IED / Card Health
…	….
RTU Diagnostics Note 5: IED Health byte n	
CP56Time2a Defined in 7.2.6.18 of IEC 60870-5-101/104	Seven octet binary time

Cause of Transmission used with TYPE IDENT 221
<3> := spontaneous
<5> := requested

RTU Diagnostics Note 1: UI8[1..8]
<0> := Normal
<1> := Blocked
<2…255> := For Private use

RTU Diagnostics Note 2 := UI8[1..8]

Each bit indicates the status of the device specified below. A bit set to 1 indicates error.

0	For Private use
1	Read only memory
2	Data bus
3	For Private use
4	RAM check
5	For Private use
6	Battery low
7	For Private use

RTU Diagnostics Note 3 := UI8[1..8]
Each bit indicates the status of the device specified below. A bit set to 1 indicates error.

0	For Private use
1	For Private use
2	For Private use
3	For Private use
4	For Private use
5	For Private use
6	For Private use
7	For Private use

RTU Diagnostics Note 4 := UI8[1..8] <0..255>
Number of IEDs/ Cards connected to the RTU.

RTU Diagnostics Note 5 := UI8[1..8]
Each bit indicates the Error in IED / Card. A bit set to 1 indicates error.

3.2.4 Parameter loading to RTU

Parameter Loading to RTU using File Transfer: For this a new file with name 130 is introduced as below. This file can be read or written using standard file transfer methods:

Clock Synchronisation time period: File:130; Section1

UI16[1..16]<0..65535>	Clock synchronization time period for IED in Seconds

Dead band for RBE (Report By Exception) of an Analogue value: File:130; Section2

Defined in 7.2.5 of IEC 60870-5-101/104	Information Object Address AI Point 1
Defined in 7.2.6.8 of IEC 60870-5-101/104	IEEE std 754 = Short Floating point number Dead Band Value for AI Point 1
	…
Defined in 7.2.5 of IEC 60870-5-101/104	Information Object Address AI Point n
Defined in 7.2.6.8 of IEC 60870-5-101/104	IEEE std 754 = Short Floating point number Dead Band Value for AI Point n

Closed Loop Action on Limit Violation: File:130; Section3

Defined in 7.2.5 of IEC 60870-5-101/104	Information Object Address AI Point 1-1
Defined in 7.2.5 of IEC 60870-5-101/104	Information Object Address AI Point 1-2
Defined in 7.2.5 of IEC 60870-5-101/104	Information Object Address DO Point 1
Defined in 7.2.6.8 of IEC 60870-5-101/104	IEEE std 754 = Short Floating point number High limit Value for AI Point 1-1 & 1-2
Defined in 7.2.6.8 of IEC 60870-5-101/104	IEEE std 754 = Short Floating point number Low limit Value for AI Point 1-1 & 1-2
Defined in 7.2.6.8 of IEC 60870-5-101/104	IEEE std 754 = Short Floating point number Time delay in Seconds
	...
Defined in 7.2.5 of IEC 60870-5-101/104	Information Object Address AI Point n-1
Defined in 7.2.5 of IEC 60870-5-101/104	Information Object Address AI Point n-2
Defined in 7.2.5 of IEC 60870-5-101/104	Information Object Address DO Point n
Defined in 7.2.6.8 of IEC 60870-5-101/104	IEEE std 754 = Short Floating point number High limit Value for AI Point n-1 & n-2
Defined in 7.2.6.8 of IEC 60870-5-101/104	IEEE std 754 = Short Floating point number Low limit Value for AI Point n-1 & n-2
Defined in 7.2.6.8 of IEC 60870-5-101/104	IEEE std 754 = Short Floating point number Time delay in Seconds

ANNEXURE-10

ETR Format

Form ETR. 1 (Part A)

..... RAILWAY

POWER BLOCK MESSAGE FOR BLOCKING OF LINES FOR ELECTRIC TRACTION PURPOSES

Serial No. Date .....
Time Hr ..... Mts .....

From,
Traction Power Controller
at .....

To,
Section controller
..... Section
.....(Place)

Block the following line/s to electric trains /all traffic from Hr.....Mts. ..... on ..... and advise me when this has been done.

State below which line/s and between which limits (Sector, Sub-sector, Elementary Section, etc.) the block is required.

.....

.....

The block is likely to last for ... Hr. Mts ...
Private No. .....
Sent by .....
Received by .....
(Name) ..... (Name) *Score out whichever is not applicable.

Form ETR-1 (Part B)

..... RAILWAY

POWER BLOCK MESSAGE FOR BLOCKING OF LINES FOR ELECTRIC TRACTION PURPOSES

Serial No. Date ....
Time Hr . ..... Mts .....

From,
Section Controller
at .....
.....(Place)

To,
Power Controller
at.....

Your No .....Of .....

The following line/s have been blocked to ' electric trains/all traffic: -

Line/s	Duration
..... From	Hr . ..... Mts .....
.....to	Hr .....Mts .....

Particulars of line/s Reasons

.....

.....

Private No .....
Sent by ..... (Name)

Received by ..... (Name)

'Score out whichever is not applicable'

	Prepared By	Checked By	Issued by
Signature	Vikash		Sumant
Date	09.11.2023	09/11/23	09/11/23
Designation	JE/ TI	ADE/ TI-3	DIRECTOR/ TI-3

Form ETR-1 (Part-C)
..... RAILWAY

POWER BLOCK MESSAGE FOR BLOCKING OF LINES FOR ELECTRIC TRACTION PURPOSES

Serial No. Date ....
Time Hr..... Mts .....

From, To
Traction Power Controller Section Controller
at ....Section
.....(Place)
Your No.....of.....(date)

The following line/s have been made alive and the block imposed on these line/s may be cancelled:-

Private No .....
Sent by .....
(Name)
Received by .....
(Name)

Form ETR-2 (Part-A)
..... RAILWAY

SHUT DOWN NOTICE ON TRACTION OVERHEAD OR OTHER ELECTRICAL EQUIPMENT

Serial **No.** Date.....
Time Hr . ..... Mts...,

From, To, ...
Traction Power Controller
at ..... at .....

I hereby declare that the following electrical equipment/s has/ have been isolated. The equipment shag be earthed according to standing instructions before commencing any work or prior to issue of Permit-to-work :-

State below exactly which section/s (Sector, Sub-sector, Elementary Section, etc.) of the electrical equipment has/ have been isolated -

Lines isolated	Limits of isolation
.....	.....
....	.....
....	.....

Line/s to be cleared **by**	Time
..... Date	..... Hr ..... Mts
..... Date	.....Hr .....Mts
.... Date	.....Hr ..... Mts

Private No .....

Sent by ..... (Name)
Received by ..... (Name)

	Prepared By	Checked By	Issued by
Signature	Vikash		
Date	09.11.2023	09.11.23	09/11/23
Designation	JE/ TI	ADE/ TI-3	DIRECTOR/ TI-3

Form ETR-2 (Part-B)

..... RAILWAY

SHUT DOWN NOTICE ON TRACTION OVERHEAD OR OTHER ELECTRICAL EQUIPMENT

Serial **No.** Date.....

Time Hr . ..... Mts...,

From,
.....
at.....

To,
Traction power controller,
at.....

Your No. .....of .....

Local earths have been applied at the following points:-

.....Line earthed at structured Nos. .....

.....Line earthed at structured Nos. .....

.....Line earthed at structured Nos. .....

The following permit to work have been issued on the authority and I am responsible for the permit to work:-

(1).....(2).....(3).....

'Permit to work' Nos. ....

Date of issue ....

Time of issue ....

Dept. Issued to ....

Person in-charge of work ....

Private No.....
Sent by .....
(Name)
Received by .....
(Name)

	Prepared By	Checked By	Issued by
Signature	Vikash		
Date	09.11.2023	09/11/23	09/11/23
Designation	JE/ TI	ADE/ TI-3	DIRECTOR/ TI-3

Form ETR-2 (Part-C)
..... RAILWAY

SHUT DOWN NOTICE ON TRACTION OVERHEAD OR OTHER ELECTRICAL EQUIPMENT

Serial No.

Date.....
Time Hr.....Mts.....

From, ...
.....
at .....

To,
Traction Power Controller
at.....

My No. ..... of.....

I hereby declare that the work on or near electrical equipment/s which has/have been isolated has been completed. All men and materials have been withdrawn and the men have been warned that it is no longer safe to work on or adjacent to electrical equipments. AN Permits-to-work issued by me have been withdrawn and cancelled. All local earths have been removed, and the electrical equipment/s can be made,alive.

Private No .....
Sent by .....
(Name)

Received by .....
(Name)

ANNEXURE-11

Standard format for generation of report in SCADA system

General Report No. REPORT/SCADA/G/1
Complete event report in chronological order

Name of Railway & Division:

Duration: From: Date……Time…….. hrs. To Date ……Time …….hrs (Duration shall be user selectable in term of date and time)

Date	Time	Post	Name of DI/DO/AI alarm etc. operated

General Report No. REPORT/SCADA/G/2
Daily Maximum/ Minimum V, I, PF, MVA & MD

Name of Railway & Division:
Name of TSS:….. (User selectable)
Date: …….. Time: ……..to……Hrs (Date & Time shall be user selectable)

Parameter		Unit	Value	Time
Incoming voltage	Min.	Kv		
	Max.	Kv		
TR-1	LV current Max.	A		
	OTI (max.)	^{0}C		
	WTI (max.)	^{0}C		
TR- 2	LV current Max.	A		
	OTI (max.)	^{0}C		
	WTI (max.)	^{0}C		
25 Kv Feeder-1 current (CB…)	Max. current	A		
25 Kv Feeder-2 current (CB…)	Max. current	A		
25 KV Feeder voltage	Min.	Kv		
	Max.	Kv		
Others	Max. MVA	MVA		
	Max. MD	MW		
	Min. power factor	-		
	Frequency (min.)	Hz		
	Frequency (max.)	Hz		
	Avg. Power factor			

Note:
The number of Transformer and Feeder mentioned in the format are indicative only; the format can be modified as per field requirement.

General Report No. REPORT/SCADA/G/3
Power Block Report

Name of Railway & Division:
Duration: From: Date……..Time…….. hrs. To Date ……Time …….hrs (Duration shall be user selectable in term of date and time)

Date	Section/ Equipment	Grant duration (Minute)	Grant time	Cancel time	Availed duration (Minute)	Availed less or Burst (Minute)	MM I	Operator code

General Report No. REPORT/SCADA/G/4
Down time Report of the post

Name of Railway & Division:
Date: From: …….. To …… (Date shall be user selectable)

Post	Time of communication fail		Time of communication restore		Duration of post failed
	Date	Time	Date	Time	Minutes

General Report No. REPORT/SCADA/G/5
Daily Maximum Demand in MVA & MW

Name of Railway & Division:
Name of TSS:……. (User selectable: All the post (TSS) of the work station shall be displayed in drop down menu of name of post. The facility shall be available to select any number of TSS at a time by the user)

Date: …….. (Date shall be user selectable)

Time		Name of TSS 1		Name of TSS 2		Name of TSS 3 …….	
		MVA	MW	MVA	MW	MVA	MW
00.00	00.15						
00.16	00.30						
00.31	00.45						
00.46	00.60						
01.00	0.1.15						

	Prepared By	Checked By	Issued by
Signature	Vikash		
Date	09.11.2023	09.11.23	09/11/23
Designation	JE/ TI	ADE/ TI-3	DIRECTOR/ TI-3

Tripping Report No. REPORT/SCADA/T/1
TSS wise CB Tripping alongwith Protection relays acted

Name of Railway & Division:

Name of Post :……..(user selectable)

Duration: From: Date……Time…….. hrs. To Date ……Time…..…hrs (Duration shall be user selectable in term of date and time)

Post	CB Number	Trip date	Trip time	Name of relays acted	R&X value	fault Current	Fault distance shown in SCADA	Actual location of fault (entry by operator)	Close time Commanded/ Uncommanded)

Note: R&X, fault current, fault distance are only applicable for Rev. 1 & Rev.2 SCADA subject to these parameters recorded by feeder protection relay and communicated with RTU.

Tripping Report No. REPORT/SCADA/T/2
TSS wise Summary of CB Tripping

Name of Railway & Division:

Duration: From: Date……Time…….. hrs. To Date ……Time……..hrs (Duration shall be user selectable in term of date and time)

Post	CB Number	Number of tripping

Tripping Report No. REPORT/SCADA/T/3
Total CB/Interrupter operation report

Name of Railway & Division:

Name of Post:……..(user selectable)

CB/Interrupter number:……. (User selectable)

Duration: From: Date……Time…….. hrs. To Date ……Time …….hrs (Duration shall be user selectable in term of date and time)

Sl. No.	Date & time of Trip/open/ Close	Relay Acted	Operation type (SCADA, Fault, Manual)

2337166/2023/O/o PED/TI/RDSO

Measurand Data & Graph Report No. REPORT/SCADA/D/1

1. V, I, PF, MVA & MD data sheet of TSS

Name of Railway & Division:

Name of TSS:……..(user selectable)

Duration: From: Date…….Time…….. hrs. To Date ……Time ……hrs
(Duration shall be user selectable in term of date and time)

Date	Time	Incoming Voltage (Kv)	TR-1 LV Current (Amp.)	TR-_2 LV Current (Amp.)	Feeder 1 Current (Amp)	Feeder 2 Current (Amp)	PF	Kv Voltage (Kv)	MVA	MD	Cap. Bank current
			CB…	CB…	CB…	CB…					CB…

2. Voltage data sheet of SP

Date	Time	27 Kv Voltage -1(Kv)	28 Kv Voltage -2 (Kv)

Note: The number of Transformer, Feeder & shunt capacitor bank are indicative only; the format can be modified as per field requirement

	Prepared By	Checked By	Issued by
Signature	Vikash		
Date	09.11.2023	09/11/23	09/11/23
Designation	JE/ TI	ADE/ TI-3	DIRECTOR/ TI-3

Measurand Data & Graph Report No. REPORT/SCADA/D/2
Graph of load Current & Voltage of TSS

Name of Railway & Division:

Name of TSS:……..(user selectable)

Duration: From: Date……Time…….. hrs. To Date ……Time …….hrs (Duration shall be user selectable in term of date and time)

X axis : Time

Y axis: Voltage & Current in different color (The Graph of Voltage, total current, Feeder-1, Feeder-2…… current shall be user selectable. Any one or multiple parameters shall be selectable to view the graph)

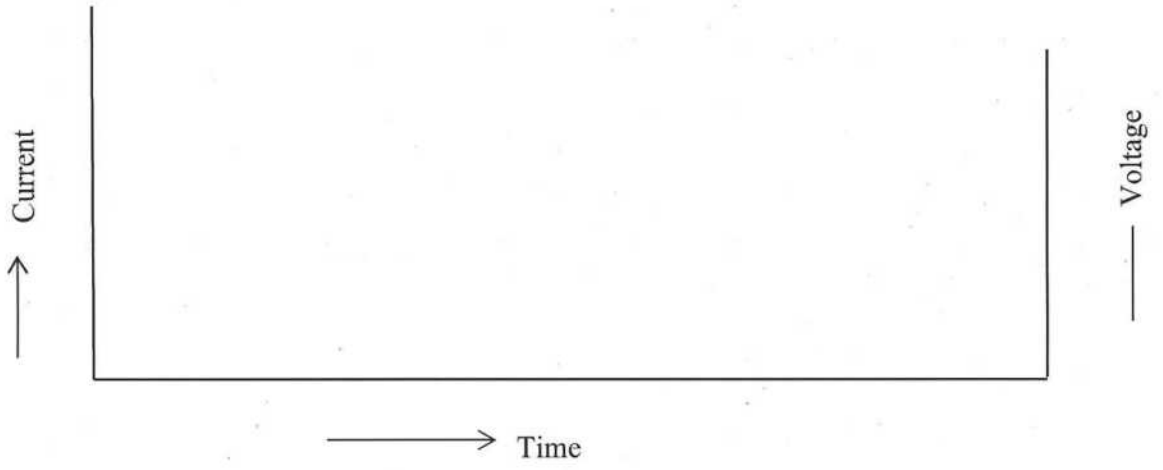

Measurand Data & Graph Report No. REPORT/SCADA/D/3
Graph of MVA, MD & PF of TSS

Name of Railway & Division:

Name of TSS:……..(user selectable)

Duration: From: Date……Time…….. hrs. To Date ……Time…….hrs (Duration shall be user selectable in term of date and time)

X axis : Time

Y axis: MVA, MD & Power factor in different color (The Graph of MVA, MD and power factor shall be user selectable. Any one or multiple parameters shall be selectable to view the graph)

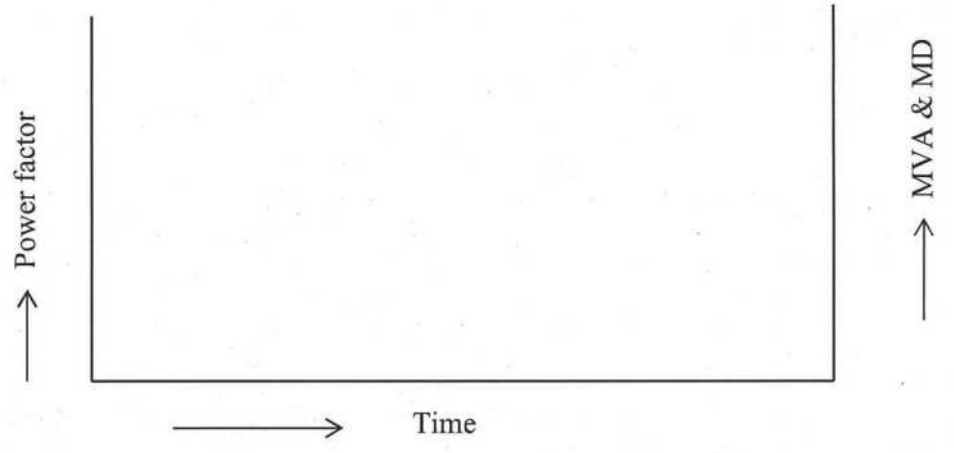

	Prepared By	Checked By	Issued by
Signature			
Date	04.11.2023	09/11/23	09/11/23
Designation	JE/ TI	ADE/ TI-3	DIRECTOR/ TI-3

2337166/2023/O/o PED/TI/RDSO

Daily Exception Report No. REPORT/SCADA/E/1
DAILY EXCEPTION REPORT

Name of Railway & Division: Date:……. (Date shall be user selectable)

1. CB Tripping more than 2 (configurable) times

CB No.	TSS	Time	Relay operated	Value of R & X	Location of fault shown at SCADA (based on [X] value read by relay / [X] ohm/Km)	Actual location of fault (to be feed by operator)	Time of CB closed	Time between CB tripped and CB closed

2. RTU down more than 15 (configurable) minutes

Post	Time of communication fail	Time of communication restore	Duration of post failed

3. MD Alarm

TSS	MD set value	Time of MD alarm	Time of MD alarm reset (MD normal) & MD value

4. Maximum / Minimum V, I, PF, MVA & MD

TSS	Incoming voltage		Transformer LV current (Max.)		Max. feeder current		MVA	MD	PF	Minimum Voltage	
	Min.	Max.	TR-1	TR-2	Feeder 1 current (CB….)	Feeder 2 current (CB…)	Max.	Max.	Min.	SP1	SP2
Unit	Kv	Kv	Amp	Amp	Amp	Amp	MVA	MVA		Kv	Kv

5. Daily Feed Extension

SP	Bridging Interrupter No.	Time of closing	Time of opening

6. Daily Grid failure

TSS	Time of incoming (Grid supply) Fail	Time of incoming supply (Grid supply) restore	Duration of failure in minutes

Note: The number of Transformer and Feeder mentioned in the format are indicative only; the format can be modified as per field requirement.

	Prepared By	Checked By	Issued by
Signature	Vikash		
Date	09.11.2023	09/11/23	09/11/23
Designation	JE/ TI	ADE/ TI-3	DIRECTOR/ TI-3

2337166/2023/O/o PED/TI/RDSO

6176

LIST OF ABBREVIATIONS — ANNEXURE-12

Abbreviation	Full Form of the Abbreviation
A&C	Addendum & Corrigendum
AFLN	Automatic Fault Localization
AH	Ampere Hour
AI	Analog Input
AMC	Annual Maintenance Contract
AP	Air Pressure
ATP	Auto Transformer Post
AT	Auto Transformer
AVR	Automatic Voltage Regulator
BM	Bridging Interrupter
CB	Circuit Breaker
CD	Compact Disc
CEA	Central Electricity Authority
CM	Common Mode
COMTRADE	Common Format for Transient Data Exchange for Power Systems
CPU	Central Processing Unit
CENELEC	European Committee for Electrotechnical Standardization
CRCA	Cold Rolled Close Annealed
CT	Current Transformer
CTPC	Chief Traction Power Controller
CDF	Common Data Format
DI	Digital Input
DM	Differential Mode
DO	Digital Output
DLMS	Device Language Message Specification
DSM	Deviation Settlement Mechanism
DPR	Distance protection relay
DMZ	De militarized Zone
DVD R/W	Digital Versatile Disc Read/Write
EHV	Extra High Voltage
EMI	Electromagnetic Interference
EMC	Electromagnetic Compatibility
EMS	Energy Management System
EUT	Equipment Under Test
FCB	Feeder Circuit Breaker
FUN	Function
GPS	Global Positioning System

2337166/2023/O/o PED/TI/RDSO

6177

GP	Gas Pressure
GUI	Graphical User Interface
HDMI	High-Definition Multimedia Interface
HDD	Hard Disk Drive
HIPS	Host Intrusion Prevention System
HMI	Human Machine Interface
HVCB	High Voltage Circuit Breaker
HT	High Tension
ICCP	Inter Control Center Communication Protocol
IDMT	Inverse Definite Minimum Time
ICT	Interposing CT
IEC	International Electrotechnical Commission
IS	Indian Standard
IACS	Industrial Automation & Control System
ICS	Industrial Control System
IDS	Intrusion Detection System
IAC	Identification and Authentication Control
IT	Information Technology
LED	Light Emitting Diode
LT	Low Tension
IOA	Information Object Address
IOL	Insulated Overlap
I/O	Input-Output
INF	Information Number
IP	Ingress Protection
IPS	Intrusion Prevention System
IEDs	Intelligent Electronic Devices
LAN	Local Area Network
LDC	Load Dispatch Centre
MD	Maximum Demand
MMI	Man Machine Interface
MODEM	Modulation-Demodulation
MPLS	Multiprotocol Label Switching
MW	Mega Watt
MVAR	Mega Volt Ampere Reactive
MVA	Mega Volt Ampere
NAS	Network Attached Storage
NC	Normally closed.
NIC	Network Interface Controller
NIFPES	Nitrogen Injection Fire Protection & Extinguishing System
NO	Normally open

2337166/2023/O/o PED/TI/RDSO

6178

NDLS-HWH	New Delhi-Howrah
NDLS-BCT	New Delhi- Bombay Central
NMS	Network Management System
OHE	Overhead Equipment
OCR	Over current relay
OEM	Original Equipment Manufacturer
OFC	Optical Fiber Communication
OLTC	On load Tap Changer
ONAN	Oil Natural Air Natural
ONAF	Oil Natural Air Force
OFAF	Oil Force Air Force
OPC	Open Platform Communication
OWS	Operator Work Station
PB	Power Block
PCs	Personal Computer
PCEE	Principal Chief Electrical Engineer
PF	Power Factor
PRD	Pressure Relief Device
PSU	Power Supply Unit
PT	Potential Transformer
PTFF	PT Fuse Failure
RC	Return Conductors.
RCC	Remote Control Centre
RDSO	Research Design and Standard Organisation
RTC	Real Time Clock
RTOS	Real Time Operating System
RTU	Remote Terminal Unit
RTD	Resistance Temperature Detector
SCADA	Supervisory Control and Data Acquisition System
SCBO	Select check-before-Execute Operate
SFTP	SSH File Transfer Protocol
SLDC	State Load Dispatch Centre
SP	Sectioning and Paralleling post
SSP	Sub-sectioning and Paralleling post
SSD	Solid State Drive
S&T	Signal and Telecom
SMT	Surface Mounting Technology
SoE	Sequence of Event
SNMP	Simple Network Management Protocol
SSE	Sr. Section Engineer
STM	Synchronous Transport Module

SEMC	State Energy Management Centre
SUB-URB	Sub-urban
TCP/IP	Transmission Control Protocol/Internet Protocol
THD	Total Harmonic Distortion
TRD	Traction Distribution
TPC	Traction Power Controller
TSS	Traction Sub-station
UPS	Un interrupted Power Supply
UTM	Unified Threat Management
USB	Universal Serial Bus
VDU	Visual/video Display Unit
VRLA	Valve Regulated Lead-Acid Battery
WPC	Wrong Phase Coupling