## DISCLAIMER

The details like name of project, name of fabricator, etc. are indicative only. These should never be referred for any WPSS related matters. Only the technical details should be referred and followed for the WPSS purpose.

# Model WPSS for
# Railway PLATE GIRDER
# (25t Loading)

# Railway Plate Girder (25t loading)
# 12.2m clear span
# MODEL WPSS No- RDSO/ Infra-II/ B&S/ RG/ PG./ WPSS / 12.2 series (9 nos)

Appendix-V (Ref.Cl.26 of BI-2001)

# WELDING PROCEDURE SPECIFICATION SHEET FOR PLATE GIRDER - WELDED TYPE 12.2M SPAN

## A-A : Tack weld for Web Plate & Flange plate

**NAME OF PROJECT** : Vijayawada Division:- Vijayawada- Guduru section: Regirdering of Br .No. 611A Up & Dn (4 x 12.20 m) and Br. No. 676 Up & Dn (4 x 12.20m)

| | | | |
|---|---|---|---|
| Name and address of Contractor | | : | M/s. S C R Nirman Private Limited<br>FLAT NO - 101, P.NO. 339, Gayathri Enclave, Sarojni Naidu Nagar, Kavuri Hills, Madhapur, Hyderabad - 500081 |
| Name and address of Fabricator | | : | M/s. SHAKTHI ENGINEERING EQUIPMENTS<br>SYNO-452, SULTANPUR,AMEENPUR, SANGAREDDY-TELANGANA |
| Welding Procedure specification No. | | : | SEE/SCR/12.2M/25T/WPSS/01 |
| 1 | Drawing No. | : | RDSO/B-16014/R1 to RDSO/B-16014/5R1 Alt - 2 |
| 2 | Weld Joint description | : | ~~5~~ 6mm, Fillet weld (Tack weld between Web and Flange Plates ) |
| 3 | Base Metal | : | IS:2062:2011, Gr E250 B0, Fully Killed & Fully Normalized & Base metal thickness (40mm X 16mm) |
| 4 | Welding Process | : | MMAW (Manual Metal Arc Welding) |
| 5 | Welding Position | : | Horizontal |
| 6 | Welding Consumable | | |
| 6.1 | Electrode/Wire | | |
| | Class | : | A2 of IRS M.28/2017 |
| | Dia | : | 4 MM |
| | Drying Method | : | Oven Drying at 150°C for 1 hour |
| 6.2 | Flux | | |
| | Class | : | NA |
| | Type | : | NA |
| | Drying Method | : | NA |
| 6.3 | Shielding Gas | : | NA |
| 7 | Base metal preparation | : | Fusion faces & adjacent surface are cleaned and made free from cracks, notches, mill scales, paints, grease, rust etc. which may affect weld quality. |
| 7.1 | Joint design details | : | |

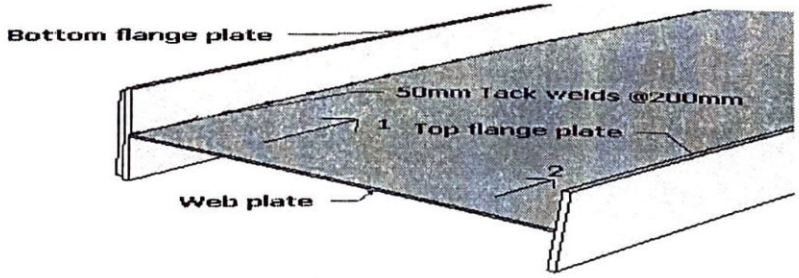


SSE/ELE/RGD

| | | | |
|---|---|---|---|
| 7.2 | Joint preparation | : | As per IS 4353 -1995, Cl.7, IRS B1 – 2001, Cl. 17 & WBC - 2001 |
| 8 | Welding Current | | |
| | Type | : | AC |
| | Polarity | : | Reverse |

1974, Appendix-V (Ref.Cl.26 of BI-2001)

| | | | |
|---|---|---|---|
| 9 | Welder Qualification | : | As per IS:7310 (Part-I) ~~-IS 817~~ IS : 7307 (part-I) -1974 |
| 10 | Welder Parameters and Technique | : | |
| 10.1 | Welding parameters and technique | : | as below |

| Welding Sequence No. | Electrodes wire dia. (mm) | Current (Amps) | Arc Voltage (Volt) | Wire Feed Speed (m/min) | Travel Speed (m/min) | Electrical Stick out (mm) | Gas Flow Rate (l/min) |
|---|---|---|---|---|---|---|---|
| 1 | 4 mm | 140 - 180 | 27 - 32 | NA | NA | NA | N.A. |

| | | | |
|---|---|---|---|
| 10.2 | Welding Sequence and technique | : | 1,2,3&4 |

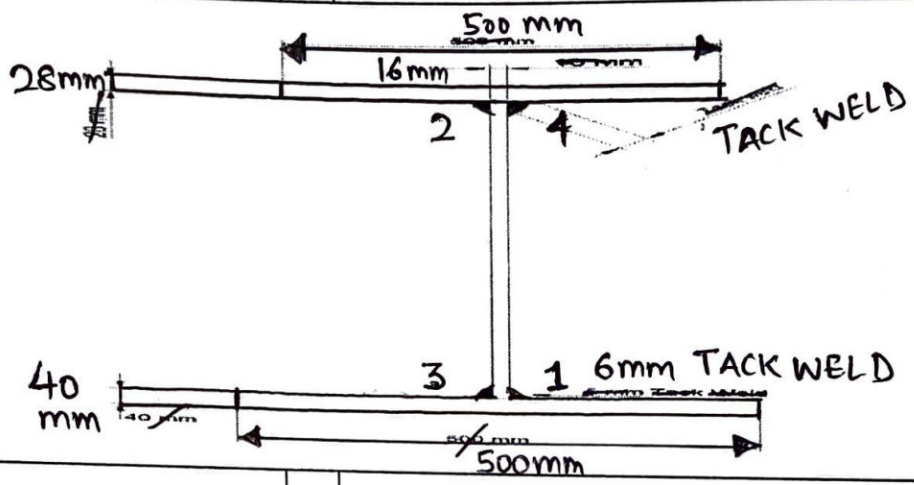


| | | | |
|---|---|---|---|
| 11 | Provision of run-on / run-off tabs | : | NA |
| 12 | Cleaning of weld bead before laying of next weld bead | : | NA |
| 13 | Root preparation before welding other side of groove welds | : | NA |
| 14 | Preheating and inter pass temperature | : | NA |
| 15 | Peening | : | NA |
| 16 | Post weld treatment | : | NA |
| 17 | Rectification of weld defect | : | By re-welding after complete removal of defective weld as per CL.32.2 of IS 9595-2003 using A2 electrode of IRS M:28-2017 after conducting D.P. Test. |
| 18 | Inspection of weld | : | Visual |
| 19 | Any other relevant detail | : | None. |

Appendix-V (Ref.Cl.26 of BI-2001)

# WELDING PROCEDURE SPECIFICATION SHEET
# FOR PLATE GIRDER - WELDED TYPE 12.2M SPAN

## B - B SAW weld between Web and Flange Plates

**NAME OF PROJECT** : Vijayawada Division:- Vijayawada- Guduru section: Regirdering of Br .No. 611A Up & Dn (4 x 12.20 m) and Br. No. 676 Up & Dn (4 x 12.20m)

| | | | |
|---|---|---|---|
| Name and address of Contractor | | : | M/s. S C R Nirman Private Limited<br>FLAT NO - 101, P.NO. 339, Gayathri Enclave, Sarojni Naidu Nagar, Kavuri Hills, Madhapur, Hyderabad - 500081 |
| Name and address of Fabricator | | : | M/s. SHAKTHI ENGINEERING EQUIPMENTS<br>SYNO-452, SULTANPUR,AMEENPUR, SANGAREDDY-TELANGANA |
| Welding Procedure specification No. | | : | SEE/SCR/12.2M/25T/WPSS/02 |
| 1 | Drawing No. | : | RDSO/B-16014/R1 to RDSO/B-16014/5R1 Alt - 2 |
| 2 | Weld Joint description | : | 14mm, Fillet weld (SAW weld between Web and Flange Plates ) |
| 3 | Base Metal | : | IS:2062:2011, Gr E250 B0, Fully Killed & Fully Normalized & Base metal thickness (40mm X 16mm) |
| 4 | Welding Process | : | SAW (Submerged Arc Welding) |
| 5 | Welding Position | : | Horizontal |
| 6 | Welding Consumable | | |
| 6.1 | Electrode/Wire | | |
| | Class | : | W1 of IRS M.39/2001 |
| | Dia | : | 4 MM |
| | Drying Method | : | NA |
| 6.2 | Flux | | |
| | Class | : | F1 of IRS M. 39-2001 |
| | Type | : | Agglomerated |
| | Drying Method | : | 250°C of One hour uses or Recommendation as per Manufacturer. |
| 6.3 | Shielding Gas | : | NA |
| 7 | Base metal preparation | : | Fusion faces & adjacent surface are cleaned and made free from cracks, notches, mill scales, paints, grease, rust etc. which may affect weld quality. |
| 7.1 | Joint design details | : | |

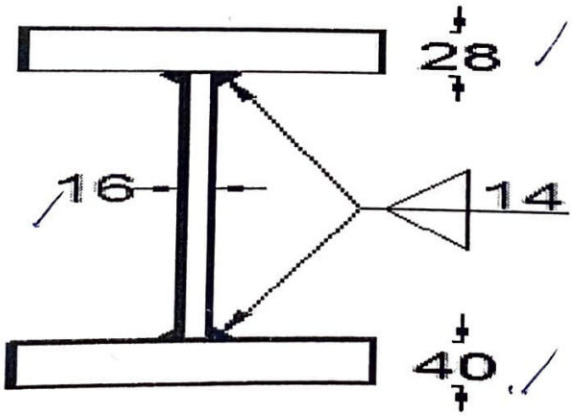


| | | | |
|---|---|---|---|
| 7.2 | Joint preparation | : | As per IS 4353 -1995, Cl.7, IRS B1 – 2001, Cl. 17 & WBC - 2001 |

| | | | |
|---|---|---|---|
| 8 | Welding Current | | |
| | Type | : | DC |
| | Polarity | : | Reverse |
| 9 | Welder Qualification | : | As per IS:7310 (Part-I) – ~~IS 817~~ IS 7307 (part I) -1974 1974, |
| 10 | Welder Parameters and Technique | : | |
| 10.1 | Welding parameters and technique | : | as below |

| Welding Sequence No. | Electrodes wire dia. (mm) | Current (Amps) | Arc Voltage (Volt) | Wire Feed Speed (m/min) | Travel Speed (m/min) | Electrical Stick out (mm) | Gas Flow Rate (I/min) |
|---|---|---|---|---|---|---|---|
| 1 | 4 mm | 475 - 525 | 27 - 32 | 1.2 -1.4 | 0.35 - 0.50 | 10 - 15 | N.A. |
| 2 | 4 mm | 475 - 525 | 27 - 32 | 1.2 -1.4 | 0.35 - 0.50 | 10 - 15 | N.A. |
| 3 | 4 mm | 475 - 525 | 27 - 32 | 1.2 -1.4 | 0.35 - 0.50 | 10 - 15 | N.A. |
| 4 | 4 mm | 475 - 525 | 27 - 32 | 1.2 -1.4 | 0.35 - 0.50 | 10 - 15 | N.A. |

| | | | |
|---|---|---|---|
| 10.2 | Welding Sequence and technique | : | 1,2,3&4 |

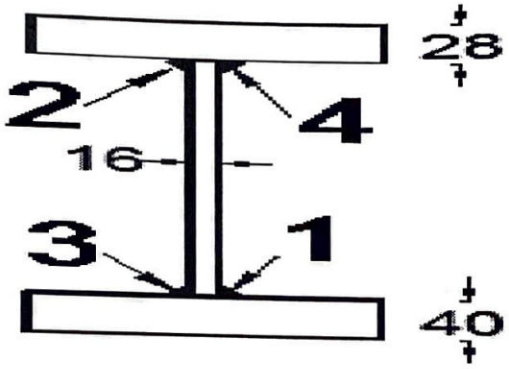


| | | | |
|---|---|---|---|
| 11 | Provision of run-on / run-off tabs | : | YES |
| 12 | Cleaning of weld bead before laying of next weld bead | : | NA |
| 13 | Root preparation before welding other side of groove welds | : | NA |
| 14 | Preheating and inter pass temperature | : | NA |
| 15 | Peening | : | NA |
| 16 | Post weld treatment | : | NA |
| 17 | Rectification of weld defect | : | By re-welding after complete removal of defective weld as per CL.32.2 of IS 9595-2003 using A2 electrode of IRS M:28-2017 after conducting D.P. Test. |
| 18 | Inspection of weld | : | Visual, D.P. Test, Macro Etching Test. |
| 19 | Any other relevant detail | : | None. |

Appendix-V (Ref.Cl.26 of BI-2001)

# WELDING PROCEDURE SPECIFICATION SHEET FOR PLATE GIRDER - WELDED TYPE 12.2M SPAN

## C - C Welding of End Bearing Stiffeners

**NAME OF PROJECT** : Vijayawada Division:- Vijayawada- Guduru section: Regirdering of Br .No. 611A Up & Dn (4 x 12.20 m) and Br. No. 676 Up & Dn (4 x 12.20m)

| | | | |
|---|---|---|---|
| Name and address of Contractor | | : | M/s. S C R Nirman Private Limited<br>FLAT NO - 101, P.NO. 339, Gayathri Enclave, Sarojni Naidu Nagar, Kavuri Hills, Madhapur, Hyderabad - 500081 |
| Name and address of Fabricator | | : | M/s. SHAKTHI ENGINEERING EQUIPMENTS<br>SYNO-452, SULTANPUR,AMEENPUR, SANGAREDDY-TELANGANA |
| Welding Procedure specification No. | | : | SEE/SCR/12.2M/25T/WPSS/03 |
| 1 | Drawing No. | : | RDSO/B-16014/R1 to RDSO/B-16014/5R1 Alt - 2 |
| 2 | Weld Joint description | : | 10mm, Fillet weld (GMAW weld between END Bearing Stiffener and Web ~~& Flange Plates~~) NA |
| 3 | Base Metal | : | IS:2062:2011, Gr E250 B0, Fully Killed & Fully Normalized & Base metal thickness (28mm X 16mm) |
| 4 | Welding Process | : | GMAW (Gas Metal Arc Welding) |
| 5 | Welding Position | : | Horizontal |
| 6 | Welding Consumable | | |
| 6.1 | Electrode/Wire | | |
| | Class | : | 1 of IRS M.46/2013 |
| | Dia | : | 1.2 MM |
| | Drying Method | : | NA |
| 6.2 | Flux | : | NA |
| 6.3 | Shielding Gas | : | CO2 |
| 7 | Base metal preparation | : | Fusion faces & adjacent surface are cleaned and made free from cracks, notches, mill scales, paints, grease, rust etc. which may affect weld quality. |
| 7.1 | Joint design details | : | |

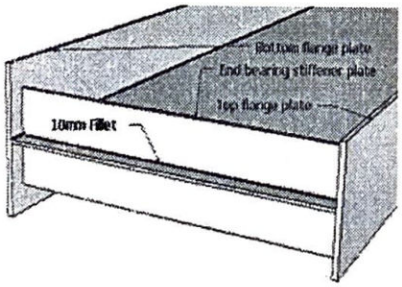


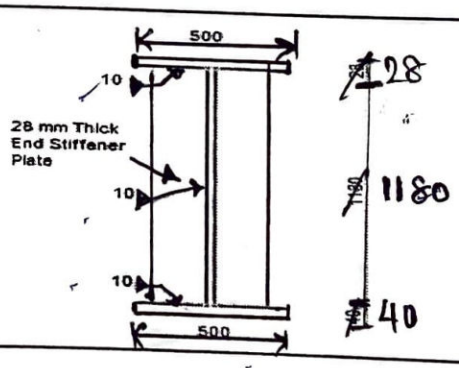


| | | | |
|---|---|---|---|
| 7.2 | Joint preparation | : | As per IS 4353 -1995, Cl.7, IRS B1 – 2001, Cl. 17 & WBC - 2001 |
| 8 | Welding Current | | |
| | Type | : | AC |
| | Polarity | : | Reverse |

SHAKTHI ENG...

| | | | |
|---|---|---|---|
| 9 | Welder Qualification | : | As per IS:7310 (Part-I) – ~~IS 817~~ IS 7307 (part I) – 1974 |
| 10 | Welder Parameters and Technique | : | |
| 10.1 | Welding parameters and technique | : | as below |

| Welding Pass No. | Electrodes wire dia. (mm) | Current (Amps) | Arc Voltage (Volt) | Wire Feed Speed (m/min) | Travel Speed (m/min) | Electrical Stick out (mm) | Gas Flow Rate (l/min) |
|---|---|---|---|---|---|---|---|
| 1 | 1.2 mm | 180 - 270 | 24 - 32 | 8.9 | NA | 15 - 20 | 16 - 24 |
| 2 | 1.2 mm | 180 - 270 | 24 - 32 | 8.9 | NA | 15 - 20 | 16 - 24 |
| 3 | 1.2 mm | 180 - 270 | 24 - 32 | 8.9 | NA | 15 - 20 | 16 - 24 |

1.5-2

| | | | |
|---|---|---|---|
| 10.2 | Welding Sequence and technique | : | NA |
| 11 | Provision of run-on / run-off tabs | : | NA |
| 12 | Cleaning of weld bead before laying of next weld bead | : | NA |
| 13 | Root preparation before welding other side of groove welds | : | NA |
| 14 | Preheating and inter pass temperature | : | NA |
| 15 | Peening | : | NA |
| 16 | Post weld treatment | : | NA |
| 17 | Rectification of weld defect | : | By re-welding after complete removal of defective weld as per CL.32.2 of IS 9595-2003 using A2 electrode of IRS M:28-2017 after conducting D.P. Test. |
| 18 | Inspection of weld | : | Visual, Weld gauge measurement, D.P. Test |
| 19 | Any other relevant detail | : | None. |

# WELDING PROCEDURE SPECIFICATION SHEET
# FOR PLATE GIRDER - WELDED TYPE 12.2M SPAN

## D - D Welding of End diaphragm Flanges Plates to End diaphragm Web Plate

**NAME OF PROJECT** : Vijayawada Division:- Vijayawada- Guduru section: Regirdering of Br .No. 611A Up & Dn (4 x 12.20 m) and Br. No. 676 Up & Dn (4 x 12.20m)

| | | | |
|---|---|---|---|
| Name and address of Contractor | | : | M/s. S C R Nirman Private Limited<br>FLAT NO - 101, P.NO. 339, Gayathri Enclave, Sarojni Naidu Nagar, Kavuri Hills, Madhapur, Hyderabad - 500081 |
| Name and address of Fabricator | | : | M/s. SHAKTHI ENGINEERING EQUIPMENTS<br>SYNO-452, SULTANPUR,AMEENPUR, SANGAREDDY-TELANGANA |
| Welding Procedure specification No. | | : | SEE/SCR/12.2M/25T/WPSS/04 |
| 1 | Drawing No. | : | RDSO/B-16014/R1 to RDSO/B-16014/5R1 Alt - 2 |
| 2 | Weld Joint description | : | 6mm, Fillet weld (SAW weld between Web Plate and Flange Plates of End Daphragm) |
| 3 | Base Metal | : | IS:2062:2011, Gr E250 B0, Fully Killed & Fully Normalized & Base metal thickness (12mm X 12mm) |
| 4 | Welding Process | : | SAW (Submerged Arc Welding) |
| 5 | Welding Position | : | Horizontal |
| 6 | Welding Consumable | | |
| 6.1 | Electrode/Wire | | |
| | Class | : | W1 of IRS M.39/2001 |
| | Dia | : | 4 MM |
| | Drying Method | : | NA |
| 6.2 | Flux | | |
| | Class | : | F1 of IRS M. 39-2001 |
| | Type | : | Agglomerated |
| | Drying Method | : | 250°C of One hour uses or Recommendation as per Manufacturer. |
| 6.3 | Shielding Gas | : | NA |
| 7 | Base metal preparation | : | Fusion faces & adjacent surface are cleaned and made free from cracks, notches, mill scales, paints, grease, rust etc. which may affect weld quality. |
| 7.1 | Joint design details | : | |

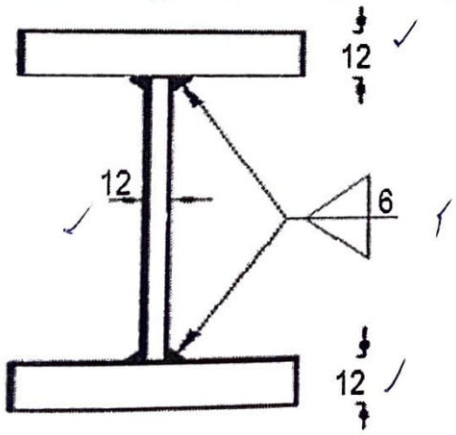


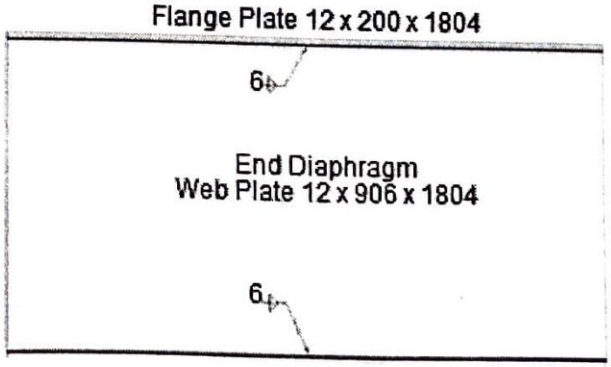


| | | | |
|---|---|---|---|
| 7.2 | Joint preparation | : | As per IS 4353 -1995, Cl.7, IRS B1 – 2001, Cl. 17 & WBC - 2001 |

| | | | |
|---|---|---|---|
| 8 | Welding Current | | |
| | Type | : | DC |
| | Polarity | : | Reverse |
| 9 | Welder Qualification | : | As per IS:7310 (Part-I) – ~~IS 817~~ IS 7307 (part I) - 1974 |
| 10 | Welder Parameters and Technique | : | |
| 10.1 | Welding parameters and technique | : | as below |

| Welding Sequence No. | Electrodes wire dia. (mm) | Current (Amps) | Arc Voltage (Volt) | Wire Feed Speed (m/min) | Travel Speed (m/min) | Electrical Stick out (mm) | Gas Flow Rate (l/min) |
|---|---|---|---|---|---|---|---|
| 1 | 4 mm | 475 - 525 | 27 - 32 | 1.2 -1.4 | 0.35 - 0.50 | 10 - 15 | N.A. |
| 2 | 4 mm | 475 - 525 | 27 - 32 | 1.2 -1.4 | 0.35 - 0.50 | 10 - 15 | N.A. |
| 3 | 4 mm | 475 - 525 | 27 - 32 | 1.2 -1.4 | 0.35 - 0.50 | 10 - 15 | N.A. |
| 4 | 4 mm | 475 - 525 | 27 - 32 | 1.2 -1.4 | 0.35 - 0.50 | 10 - 15 | N.A. |

| | | | |
|---|---|---|---|
| 10.2 | Welding Sequence and technique | : | 1,2,3&4 |

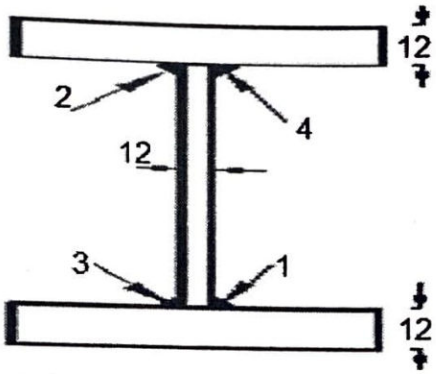


| | | | |
|---|---|---|---|
| 11 | Provision of run-on / run-off tabs | : | YES |
| 12 | Cleaning of weld bead before laying of next weld bead | : | NA |
| 13 | Root preparation before welding other side of groove welds | : | NA |
| 14 | Preheating and inter pass temperature | : | NA |
| 15 | Peening | : | NA |
| 16 | Post weld treatment | : | NA |
| 17 | Rectification of weld defect | : | By re-welding after complete removal of defective weld as per CL.32.2 of IS 9595-2003 using A2 electrode of IRS M:28-2017 after conducting D.P. Test. |
| 18 | Inspection of weld | : | Visual, D.P. Test, Macro Etching Test. |
| 19 | Any other relevant detail | : | None. |

Appendix-V (Ref.Cl.26 of BI-2001)

# WELDING PROCEDURE SPECIFICATION SHEET
# FOR PLATE GIRDER - WELDED TYPE 12.2M SPAN

## E - E Welding of end diaphragm Stiffeners to end diaphragm Web Plate

**NAME OF PROJECT** : Vijayawada Division:- Vijayawada- Guduru section: Regirdering of Br .No. 611A Up & Dn (4 x 12.20 m) and Br. No. 676 Up & Dn (4 x 12.20m)

| | | | |
|---|---|---|---|
| Name and address of Contractor | | : | M/s. S C R Nirman Private Limited<br>FLAT NO - 101, P.NO. 339, Gayathri Enclave, Sarojni Naidu Nagar, Kavuri Hills, Madhapur, Hyderabad - 500081 |
| Name and address of Fabricator | | : | M/s. SHAKTHI ENGINEERING EQUIPMENTS<br>SYNO-452, SULTANPUR,AMEENPUR, SANGAREDDY-TELANGANA |
| Welding Procedure specification No. | | : | SEE/SCR/12.2M/25T/WPSS/05 |
| 1 | Drawing No. | : | RDSO/B-16014/R1 to RDSO/B-16014/5R1 Alt - 2 |
| 2 | Weld Joint description | : | 6mm, Fillet weld (GMAW weld between Bearing Stiffener and Web Plate of End Diaphragm Plates) |
| 3 | Base Metal | : | IS:2062:2011, Gr E250 B0, Fully Killed & Fully Normalized & Base metal thickness (12mm X 12mm) |
| 4 | Welding Process | : | GMAW (Gas Metal Arc Welding) |
| 5 | Welding Position | : | Horizontal |
| 6 | Welding Consumable | | |
| 6.1 | Electrode/Wire | | |
| | Class | : | 1 of IRS M.46/2013 |
| | Dia | : | 1.2 MM |
| | Drying Method | : | NA |
| 6.2 | Flux | : | NA |
| 6.3 | Shielding Gas | : | CO2 |
| 7 | Base metal preparation | : | Fusion faces & adjacent surface are cleaned and made free from cracks, notches, mill scales, paints, grease, rust etc. which may affect weld quality. |
| 7.1 | Joint design details | : | |

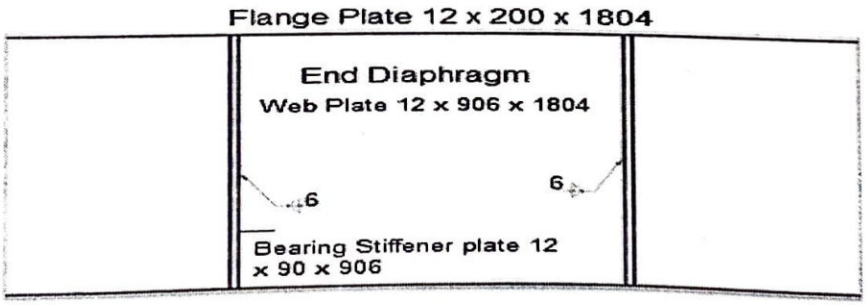


| | | | |
|---|---|---|---|
| 7.2 | Joint preparation | : | As per IS 4353 -1995, Cl.7, IRS B1 – 2001, Cl. 17 & WBC - 2001 |
| 8 | Welding Current | | |
| | Type | : | AC |
| | Polarity | : | Reverse |

| | | | |
|---|---|---|---|
| 9 | Welder Qualification | : | As per IS:7310 (Part-I) - ~~IS 817~~ IS 7307 (part I) - 1974 |
| 10 | Welder Parameters and Technique | : | |
| 10.1 | Welding parameters and technique | : | as below |

| Welding Pass No. | Electrodes wire dia. (mm) | Current (Amps) | Arc Voltage (Volt) | Wire Feed Speed (m/min) | Travel Speed (m/min) | Electrical Stick out (mm) | Gas Flow Rate (l/min) |
|---|---|---|---|---|---|---|---|
| 1 | 1.2 mm | 180 - 250 | 24 - 32 | ~~5.0 - 8.9~~ | NA | 15 - 20 | 16 - 24 |
| 2 | 1.2 mm | 180 - 250 | 24 - 32 | ~~5.0 - 8.9~~ 1.5 - 2 | NA | 15 - 20 | 16 - 24 |

| | | | |
|---|---|---|---|
| 10.2 | Welding Sequence and technique | : | NA |
| 11 | Provision of run-on / run-off tabs | : | NA |
| 12 | Cleaning of weld bead before laying of next weld bead | : | NA |
| 13 | Root preparation before welding other side of groove welds | : | NA |
| 14 | Preheating and inter pass temperature | : | NA |
| 15 | Peening | : | NA |
| 16 | Post weld treatment | : | NA |
| 17 | Rectification of weld defect | : | By re-welding after complete removal of defective weld as per CL.32.2 of IS 9595-2003 using A2 electrode of IRS M:28-2017 after conducting D.P. Test. |
| 18 | Inspection of weld | : | Visual, Weld gauge measurement, D.P. Test |
| 19 | Any other relevant detail | : | None. |

# WELDING PROCEDURE SPECIFICATION SHEET
# FOR PLATE GIRDER - WELDED TYPE 12.2M SPAN

**F - F: Welding of Pad Plate (Jacking) to End Diaphragm Bottom Flange Plate**

**NAME OF PROJECT** : Vijayawada Division:- Vijayawada- Guduru section: Regirdering of Br .No. 611A Up & Dn (4 x 12.20 m) and Br. No. 676 Up & Dn (4 x 12.20m)

| | | | |
|---|---|---|---|
| Name and address of Contractor | | : | M/s. S C R Nirman Private Limited<br>FLAT NO - 101, P.NO. 339, Gayathri Enclave, Sarojni Naidu Nagar, Kavuri Hills, Madhapur, Hyderabad - 500081 |
| Name and address of Fabricator | | : | M/s. SHAKTHI ENGINEERING EQUIPMENTS<br>SYNO-452, SULTANPUR,AMEENPUR, SANGAREDDY-TELANGANA |
| Welding Procedure specification No. | | : | SEE/SCR/12.2M/25T/WPSS/06 |
| 1 | Drawing No. | : | RDSO/B-16014/R1 to RDSO/B-16014/5R1 Alt - 2 |
| 2 | Weld Joint description | : | 6mm, Fillet weld (GMAW weld between Pad Plate to End Diaphragm Bottom Flange Plate) |
| 3 | Base Metal | : | IS:2062:2011, Gr E250 B0, Fully Killed & Fully Normalized & Base metal thickness (12mm X 12mm) |
| 4 | Welding Process | : | GMAW (Gas Metal Arc Welding) |
| 5 | Welding Position | : | Horizontal |
| 6 | Welding Consumable | | |
| 6.1 | Electrode/Wire | | |
| | Class | : | 1 of IRS M.46/2013 |
| | Dia | : | 1.2 MM |
| | Drying Method | : | NA |
| 6.2 | Flux | : | NA |
| 6.3 | Shielding Gas | : | CO2 |
| 7 | Base metal preparation | : | Fusion faces & adjacent surface are cleaned and made free from cracks, notches, mill scales, paints, grease, rust etc. which may affect weld quality. |
| 7.1 | Joint design details | : | |

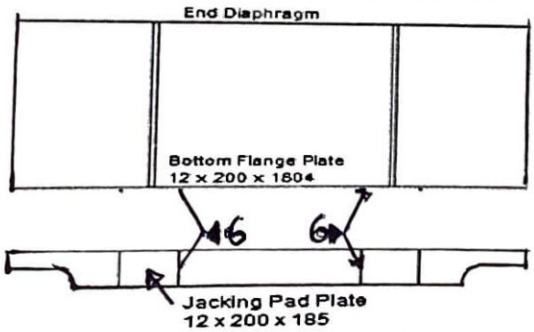


| | | | |
|---|---|---|---|
| 7.2 | Joint preparation | : | As per IS 4353 -1995, Cl.7, IRS B1 – 2001, Cl. 17 & WBC - 2001 |
| 8 | Welding Current | | |
| | Type | : | AC |
| | Polarity | : | Reverse |

| | | | |
|---|---|---|---|
| 9 | Welder Qualification | : | As per IS:7310 (Part-I) – ~~IS 817~~ 1974, IS 7307 (part I) – 1974 |
| 10 | Welder Parameters and Technique | : | |
| 10.1 | Welding parameters and technique | : | as below |

| Welding Pass No. | Electrodes wire dia. (mm) | Current (Amps) | Arc Voltage (Volt) | Wire Feed Speed (m/min) | Travel Speed (m/min) | Electrical Stick out (mm) | Gas Flow Rate (l/min) |
|---|---|---|---|---|---|---|---|
| 1 | 1.2 mm | 180 - 250 | 24 - 32 | 5.0 - ~~8.9~~ | NA | 15 - 20 | 16 - 24 |
| 2 | 1.2 mm | 180 - 250 | 24 - 32 | ~~5.0 - 8.9~~ 1.5 - 2 | NA | 15 - 20 | 16 - 24 |

| | | | |
|---|---|---|---|
| 10.2 | Welding Sequence and technique | : | NA |
| 11 | Provision of run-on / run-off tabs | : | NA |
| 12 | Cleaning of weld bead before laying of next weld bead | : | NA |
| 13 | Root preparation before welding other side of groove welds | : | NA |
| 14 | Preheating and inter pass temperature | : | NA |
| 15 | Peening | : | NA |
| 16 | Post weld treatment | : | NA |
| 17 | Rectification of weld defect | : | By re-welding after complete removal of defective weld as per CL.32.2 of IS 9595-2003 using A2 electrode of IRS M:28-2017 after conducting D.P. Test. |
| 18 | Inspection of weld | : | Visual, Weld gauge measurement, D.P. Test |
| 19 | Any other relevant detail | : | None. |

Appendix-V (Ref.Cl.26 of BI-2001)

# WELDING PROCEDURE SPECIFICATION SHEET FOR PLATE GIRDER - WELDED TYPE 12.2M SPAN

## G - G Welding of Intermediate X-Frame - End gusset & middle gusset to Angles

**NAME OF PROJECT** : Vijayawada Division:- Vijayawada- Guduru section: Regirdering of Br .No. 611A Up & Dn (4 x 12.20 m) and Br. No. 676 Up & Dn (4 x 12.20m)

| | | | |
|---|---|---|---|
| Name and address of Contractor | | : | M/s. S C R Nirman Private Limited<br>FLAT NO - 101, P.NO. 339, Gayathri Enclave, Sarojni Naidu Nagar, Kavuri Hills, Madhapur, Hyderabad - 500081 |
| Name and address of Fabricator | | : | M/s. SHAKTHI ENGINEERING EQUIPMENTS<br>SYNO-452, SULTANPUR,AMEENPUR, SANGAREDDY-TELANGANA |
| Welding Procedure specification No. | | : | SEE/SCR/12.2M/25T/WPSS/07 |
| 1 | Drawing No. | : | RDSO/B-16014/R1 to RDSO/B-16014/5R1 Alt - 2 |
| 2 | Weld Joint description | : | 8mm, Fillet weld (GMAW weld between Intermediate X Frames - End Gusset Plate to Angle & Middle Gusset Angle) |
| 3 | Base Metal | : | IS:2062:2011, Gr E250 B0, Fully Killed & Fully Normalized & Base metal thickness (12mm X ISA 75x75x10mm) |
| 4 | Welding Process | : | GMAW (Gas Metal Arc Welding) |
| 5 | Welding Position | : | Horizontal |
| 6 | Welding Consumable | | |
| 6.1 | Electrode/Wire | | |
| | Class | : | 1 of IRS M.46/2013 |
| | Dia | : | 1.2 MM |
| | Drying Method | : | NA |
| 6.2 | Flux | : | NA |
| 6.3 | Shielding Gas | : | CO2 |
| 7 | Base metal preparation | : | Fusion faces & adjacent surface are cleaned and made free from cracks, notches, mill scales, paints, grease, rust etc. which may affect weld quality. |
| 7.1 | Joint design details | : | |

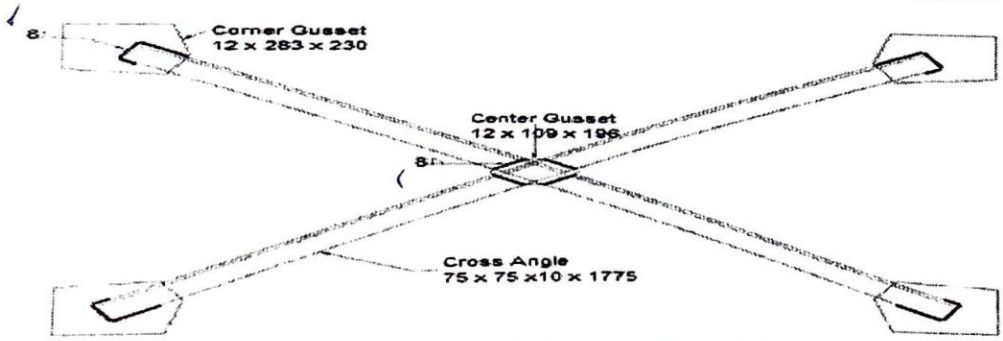


| | | | |
|---|---|---|---|
| 7.2 | Joint preparation | : | As per IS 4353 -1995, Cl.7, IRS B1 – 2001, Cl. 17 & WBC - 2001 |
| 8 | Welding Current | | |
| | Type | : | AC |
| | Polarity | : | Reverse |

| | | | |
|---|---|---|---|
| 9 | Welder Qualification | : | As per IS:7310 (Part-I) – ~~IS 817~~ IS 7307 (part I) – 1974 |
| 10 | Welder Parameters and Technique | : | |
| 10.1 | Welding parameters and technique | : | as below |

| Welding Pass No. | Electrodes wire dia. (mm) | Current (Amps) | Arc Voltage (Volt) | Wire Feed Speed (m/min) | Travel Speed (m/min) | Electrical Stick out (mm) | Gas Flow Rate (l/min) |
|---|---|---|---|---|---|---|---|
| 1 | 1.2 mm | 180 - 250 | 24 - 32 | ~~5.0 - 8.9~~ | NA | 15 - 20 | 16 - 24 |
| 2 | 1.2 mm | 180 - 250 | 24 - 32 | ~~5.0 - 8.9~~ 1.5-2 | NA | 15 - 20 | 16 - 24 |

| | | | |
|---|---|---|---|
| 10.2 | Welding Sequence and technique | : | NA |
| 11 | Provision of run-on / run-off tabs | : | NA |
| 12 | Cleaning of weld bead before laying of next weld bead | : | NA |
| 13 | Root preparation before welding other side of groove welds | : | NA |
| 14 | Preheating and inter pass temperature | : | NA |
| 15 | Peening | : | NA |
| 16 | Post weld treatment | : | NA |
| 17 | Rectification of weld defect | : | By re-welding after complete removal of defective weld as per CL.32.2 of IS 9595-2003 using A2 electrode of IRS M:28-2017 after conducting D.P. Test. |
| 18 | Inspection of weld | : | Visual, Weld gauge measurement, D.P. Test |
| 19 | Any other relevant detail | : | None. |

Appendix-V (Ref.Cl.26 of BI-2001)

# WELDING PROCEDURE SPECIFICATION SHEET FOR PLATE GIRDER - WELDED TYPE 12.2M SPAN

## H - H Welding of Location strips on the bed plates

**NAME OF PROJECT** : Vijayawada Division:- Vijayawada- Guduru section: Regirdering of Br .No. 611A Up & Dn (4 x 12.20 m) and Br. No. 676 Up & Dn (4 x 12.20m)

| | | | |
|---|---|---|---|
| Name and address of Contractor | | : | M/s. S C R Nirman Private Limited<br>FLAT NO - 101, P.NO. 339, Gayathri Enclave, Sarojni Naidu Nagar, Kavuri Hills, Madhapur, Hyderabad - 500081 |
| Name and address of Fabricator | | : | M/s. SHAKTHI ENGINEERING EQUIPMENTS<br>SYNO-452, SULTANPUR,AMEENPUR, SANGAREDDY-TELANGANA |
| Welding Procedure specification No. | | : | SEE/SCR/12.2M/25T/WPSS/08 |
| 1 | Drawing No. | : | RDSO/B-16014/R1 to RDSO/B-16014/5R1 Alt - 2 |
| 2 | Weld Joint description | : | 8mm, Fillet weld (GMAW weld between On Location Strip on Bed Plate) |
| 3 | Base Metal | : | IS:2062:2011, Gr E250 B0, Fully Killed & Fully Normalized & Base metal thickness (25mm X 50mm) |
| 4 | Welding Process | : | GMAW (Gas Metal Arc Welding) |
| 5 | Welding Position | : | Horizontal |
| 6 | Welding Consumable | | |
| 6.1 | Electrode/Wire | | |
| | Class | : | 1 of IRS M.46/2013 |
| | Dia | : | 1.2 MM |
| | Drying Method | : | NA |
| 6.2 | Flux | : | NA |
| 6.3 | Shielding Gas | : | CO2 |
| 7 | Base metal preparation | : | Fusion faces & adjacent surface are cleaned and made free from cracks, notches, mill scales, paints, grease, rust etc. which may affect weld quality. |
| 7.1 | Joint design details | : | |

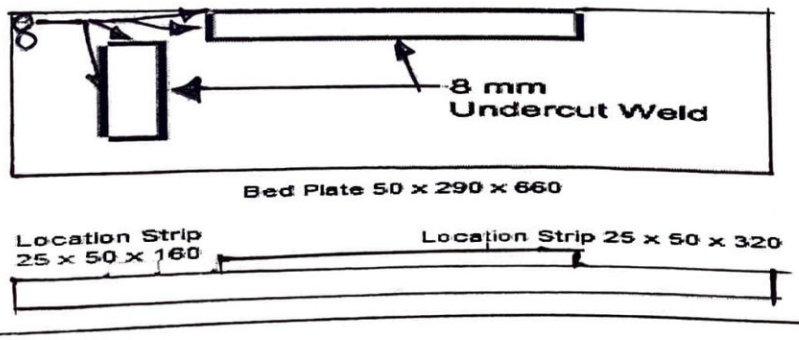


| | | | |
|---|---|---|---|
| 7.2 | Joint preparation | : | As per IS 4353 -1995, Cl.7, IRS B1 – 2001, Cl. 17 & WBC - 2001 |
| 8 | Welding Current | | |
| | Type | : | AC |
| | Polarity | : | Reverse |

1974, Appendix-V (Ref.Cl.26 of BI-2001)

| | | | |
|---|---|---|---|
| 9 | Welder Qualification | : | As per IS:7310 (Part-I) ~~-IS 817~~ IS 7307 (part I) -1974 |
| 10 | Welder Parameters and Technique | : | |
| 10.1 | Welding parameters and technique | : | as below |

| Welding Pass No. | Electrodes wire dia. (mm) | Current (Amps) | Arc Voltage (Volt) | Wire Feed Speed (m/min) | Travel Speed (m/min) | Electrical Stick out (mm) | Gas Flow Rate (l/min) |
|---|---|---|---|---|---|---|---|
| 1 | 1.2 mm | 180 - 250 | 24 - 32 | ~~5.0 - 8.9~~ | NA | 15 - 20 | 16 - 24 |
| 2 | 1.2 mm | 180 - 250 | 24 - 32 | ~~5.0 - 8.9~~ 1.5-2 | NA | 15 - 20 | 16 - 24 |

| | | | |
|---|---|---|---|
| 10.2 | Welding Sequence and technique | : | NA |
| 11 | Provision of run-on / run-off tabs | : | NA |
| 12 | Cleaning of weld bead before laying of next weld bead | : | NA |
| 13 | Root preparation before welding other side of groove welds | : | NA |
| 14 | Preheating and inter pass temperature | : | NA |
| 15 | Peening | : | NA |
| 16 | Post weld treatment | : | NA |
| 17 | Rectification of weld defect | : | By re-welding after complete removal of defective weld as per CL.32.2 of IS 9595-2003 using A2 electrode of IRS M:28-2017 after conducting D.P. Test. |
| 18 | Inspection of weld | : | Visual, Weld gauge measurement, D.P. Test |
| 19 | Any other relevant detail | : | None. |

Appendix-V (Ref.Cl.26 of BI-2001)

# WELDING PROCEDURE SPECIFICATION SHEET
# FOR PLATE GIRDER - WELDED TYPE 12.2M SPAN

## I - I Welding of Bearing plates to the bottom flange plates

**NAME OF PROJECT** : Vijayawada Division:- Vijayawada- Guduru section: Regirdering of Br .No. 611A Up & Dn (4 x 12.20 m) and Br. No. 676 Up & Dn (4 x 12.20m)

| | | | |
|---|---|---|---|
| Name and address of Contractor | | : | M/s. S C R Nirman Private Limited<br>FLAT NO - 101, P.NO. 339, Gayathri Enclave, Sarojni Naidu Nagar, Kavuri Hills, Madhapur, Hyderabad - 500081 |
| Name and address of Fabricator | | : | M/s. SHAKTHI ENGINEERING EQUIPMENTS<br>SYNO-452, SULTANPUR,AMEENPUR, SANGAREDDY-TELANGANA |
| Welding Procedure specification No. | | : | SEE/SCR/12.2M/25T/WPSS/09 |
| 1 | Drawing No. | : | RDSO/B-16014/R1 to RDSO/B-16014/5R1 Alt - 2 |
| 2 | Weld Joint description | : | 8mm, Fillet weld (GMAW weld between On Bearing Plate to the Bottom Flange Plate) |
| 3 | Base Metal | : | IS:2062:2011, Gr E250 B0, Fully Killed & Fully Normalized &<br>Base metal thickness (40mm X ~~30mm~~) 32 mm |
| 4 | Welding Process | : | GMAW (Gas Metal Arc Welding) |
| 5 | Welding Position | : | Horizontal |
| 6 | Welding Consumable | | |
| 6.1 | Electrode/Wire | | |
| | Class | : | 1 of IRS M.46/2013 |
| | Dia | : | 1.2 MM |
| | Drying Method | : | NA |
| 6.2 | Flux | : | NA |
| 6.3 | Shielding Gas | : | CO2 |
| 7 | Base metal preparation | : | Fusion faces & adjacent surface are cleaned and made free from cracks, notches, mill scales, paints, grease, rust etc. which may affect weld quality. |
| 7.1 | Joint design details | : | |

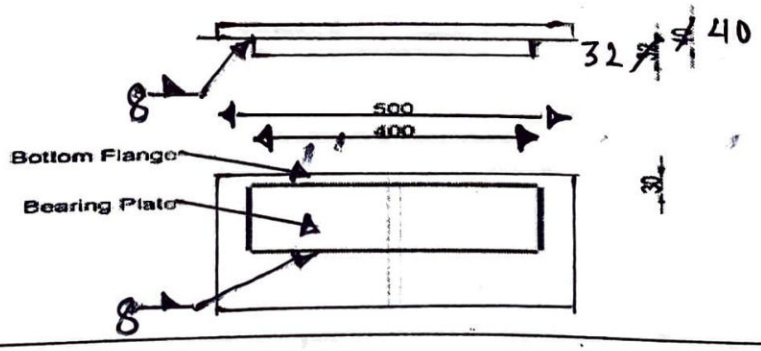


| | | | |
|---|---|---|---|
| 7.2 | Joint preparation | : | As per IS 4353 -1995, Cl.7, IRS B1 – 2001, Cl. 17 & WBC - 2001 |
| 8 | Welding Current | | |
| | Type | : | AC |
| | Polarity | : | Reverse |

Appendix-V (Ref.Cl.26 of BI-2001)

| | | | |
|---|---|---|---|
| 9 | Welder Qualification | : | As per IS:7310 (Part-I) – ~~IS 817~~ IS 7307 (part I) - 1974 |
| 10 | Welder Parameters and Technique | : | |
| 10.1 | Welding parameters and technique | : | as below |

| Welding Pass No. | Electrodes wire dia. (mm) | Current (Amps) | Arc Voltage (Volt) | Wire Feed Speed (m/min) | Travel Speed (m/min) | Electrical Stick out (mm) | Gas Flow Rate (l/min) |
|---|---|---|---|---|---|---|---|
| 1 | 1.2 mm | 180 - 250 | 24 - 32 | ~~5.0 - 8.9~~ | NA | 15 - 20 | 16 - 24 |
| 2 | 1.2 mm | 180 - 250 | 24 - 32 | ~~5.0 - 8.9~~ 1.5 - 2 | NA | 15 - 20 | 16 - 24 |

| | | | |
|---|---|---|---|
| 10.2 | Welding Sequence and technique | : | NA |
| 11 | Provision of run-on / run-off tabs | : | NA |
| 12 | Cleaning of weld bead before laying of next weld bead | : | NA |
| 13 | Root preparation before welding other side of groove welds | : | NA |
| 14 | Preheating and inter pass temperature | : | NA |
| 15 | Peening | : | NA |
| 16 | Post weld treatment | : | NA |
| 17 | Rectification of weld defect | : | By re-welding after complete removal of defective weld as per CL.32.2 of IS 9595-2003 using A2 electrode of IRS M:28-2017 after conducting D.P. Test. |
| 18 | Inspection of weld | : | Visual, Weld gauge measurement, D.P. Test |
| 19 | Any other relevant detail | : | None. |

# Railway Plate Girder (25t loading)
# 18.3m clear span
# MODEL WPSS No- RDSO/ Infra-II/ B&S/ RG/ PG./ WPSS / 18.3 series (8 nos)

Appendix-V (Ref.CI.26 of B I-2001)

# Welding Procedure Specification Sheet for 25T Loading 18.3M Span Welded type Plate Girder

| | | | |
|---|---|---|---|
| Name and address of Fabricator | | : | M/s. BISWAJIT ENGINEERING.<br>Dhanmandal, Badachana, Jajpur-754024,Odisha. |
| Welding Procedure specification No. | | : | ITL-KEC(JV)/BE/RVNL/18.3M/01 Date- 03.04.2021 |
| 01. | Drawing No. | : | RDSO B-16015/R Series |
| 02. | Welding Joint Description. | : | Fillet 08 mm. |
| 03. | Base Metal. | : | IS: 2062:2011, Gr. - B0. |
| 04. | Welding Process | : | S.A.W. |
| 05. | Welding Position. | : | Flat |
| 06. | Welding Consumable. | | |
| 6.1 | Electrode/Wire | | |
| | Class | : | W1 of IRS M.39-2001. |
| | Type | : | Copper coated Mild Steel Wire. |
| | Drying Method | : | N.A. |
| 6.2 | Flux | | |
| | Class | : | F 1 or IRS M.39 – 2001 |
| | Type | : | Agglomerated. |
| | Drying Method | : | Recommendation as per manufacturer. |
| 6.3 | Shielding Gas | : | N.A. |
| 07. | Base Metal Preparation | : | Fusion Faces and adjacent surfaces are cleaned and made free from Cracks, Notches, Mill scale, Grease, Paint, Rust etc., which may affected weld quality. |
| 7.1 | Joint design Details | : | |
| | (Sketch showing arrangements of parts, weld bead details, weld passes & their sequence etc.,)<br>1st Bottom Flange Plate to 2nd Bottom Flange Plate | | 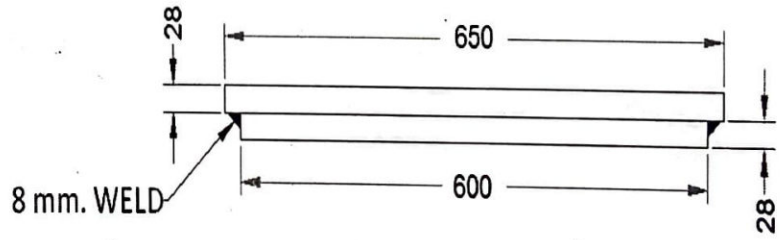 |
| 7.2 | Joint preparation | : | As Per IS: 4353 – 1995, CI.7, IRS B1-2001, CI.17.3 & WBC – 2001. |
| 08. | Welding Current | : | |
| | Type | : | DC |
| | Polarity | : | Reverse |
| 09. | Welder qualification | : | As per IS: 7310/7307 (Part-I) – 1974 |
| 10. | Welding Parameters and technique | : | |
| 10.1 | Welding Parameters | : | |

सहायक अनुसंधान अधिकारी (धातु)
Assistant Research Officer (Met)
रेल मंत्रालय लखनऊ-11

Appendix-V (Ref.CI.26 of BI-2001)

| Weld Pass No. | Electrodes wire dia. (mm) | Current (Amps) | Arc Voltage (Volt) | Wire Feed Speed (m/min) | Travel Speed (m/min) | Electrical Stick out (mm) | Gas Flow (I/min.) |
|---|---|---|---|---|---|---|---|
| 1 | 4 | 500-560 | 30-32 | 1.6-2.0 | 0.40-0.60 | 15-20 | N.A. |

| | | | |
|---|---|---|---|
| 10.2 | Welding Sequence and technique | : | Welding from run on to run off tabs at the free ends. |

Clamping of double Part before Weld

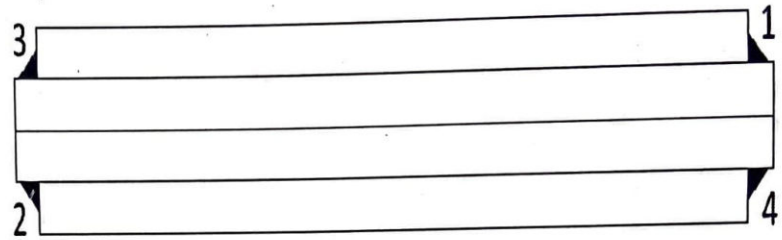


| | | | |
|---|---|---|---|
| 11. | Provision of run-on / run-off tabs | : | Yes |
| 12. | Cleaning of weld bead before laying next weld bead | : | N.A. |
| 13. | Root preparation before welding other side of groove weld | : | N.A. |
| 14. | Preheating and inter pass temperature | : | N.A. |
| 15. | Peening | : | N.A. |
| 16. | Post Weld treatment | : | N.A. |
| 17. | Rectification of weld defect | : | By re-welding after complete removal of defective weld as per 9595 of cl. 32.2 by A4 electrode. |
| 18. | Inspection of Weld | : | Visual, D.P. Test & Macro Etching |
| 19. | Any other relevant Details | : | 1ST Bottom Flange to 2ND Bottom Flange. |

सहायक अनुसंधान अधिकारी (धातु)
Assistant Research Officer (Met)
रा.म.प्र.सं. रेल मंत्रालय लखनऊ-11

Appendix-V (Ref.CI.26 of B I-2001)

# Welding Procedure Specification Sheet for 25T Loading 18.3M Span Welded type Plate Girder

| | | | |
|---|---|---|---|
| Name and address of Fabricator | | : | M/s. BISWAJIT ENGINEERING. Dhanmandal, Badachana, Jajpur-754024,Odisha. |
| Welding Procedure specification No. | | : | ITL-KEC(JV)/BE/RVNL/18.3M/02 Date- 03.04.2021 |
| 01. | Drawing No. | : | RDSO B-16015/R Series |
| 02. | Welding Joint Description. | : | Fillet 12 mm |
| 03. | Base Metal. | : | IS: 2062:2011, Gr. - B0. |
| 04. | Welding Process | : | S.A.W. |
| 05. | Welding Position. | : | Flat |
| 06. | Welding Consumable. | | |
| 6.1 | Electrode/Wire | | |
| | Class | : | W1 of IRS M.39-2001. |
| | Type | : | Copper coated Mild Steel Wire. |
| | Drying Method | : | N.A. |
| 6.2 | Flux | | |
| | Class | : | F 1 or IRS M.39 – 2001 |
| | Type | : | Agglomerated. |
| | Drying Method | : | Recommendation as per manufacturer. |
| 6.3 | Shielding Gas | : | N.A. |
| 07. | Base Metal Preparation | : | Fusion Faces and adjacent surfaces are cleaned and made free from Cracks, Notches, Mill scale, Grease, Paint, Rust etc., which may affected weld quality. |
| 7.1 | Joint design Details | : | |
| | (Sketch showing arrangements of parts, weld bead details, weld passes & their sequence etc.,)<br>Top/Bottom Flange plate to Web plate. | | 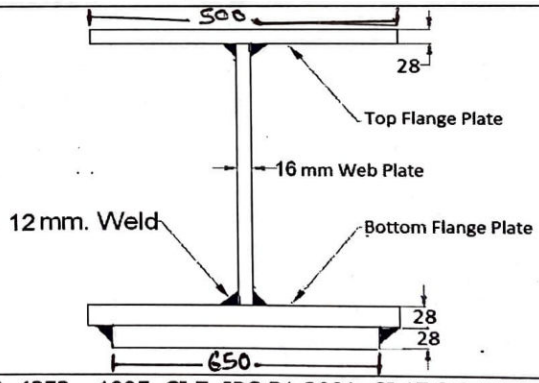 |
| 7.2 | Joint preparation | : | As Per IS: 4353 – 1995, CI.7, IRS B1-2001, CI.17.3 & WBC – 2001. |
| 08. | Welding Current | : | |
| | Type | : | DC |
| | Polarity | : | Reverse |
| 09. | Welder qualification | : | As per IS: 7310/7307 (Part-I) – 1974 |
| 10. | Welding Parameters and technique | : | |
| 10.1 | Welding Parameters | : | |

20.10.21
सहायक अनुसंधान अधिकारी (यांत्रिक)
Assistant Research Officer (Mech)
अनुसंधान एवं मानकीकरण संगठन-1

Appendix-V (Ref.CI.26 of BI-2001)

| Weld Pass No. | Electrodes wire dia. (mm) | Current (Amps) | Arc Voltage (Volt) | Wire Feed Speed (m/min) | Travel Speed (m/min) | Electrical Stick out (mm) | Gas Flow (I/min.) |
|---|---|---|---|---|---|---|---|
| 1 | 4 | 500-560 | 30-32 | 1.6-2.0 | 0.40-0.60 | 15-20 | N.A. |

| | | | |
|---|---|---|---|
| 10.2 | Welding Sequence and technique | : | Welding from run on to run off tabs at the free ends. |

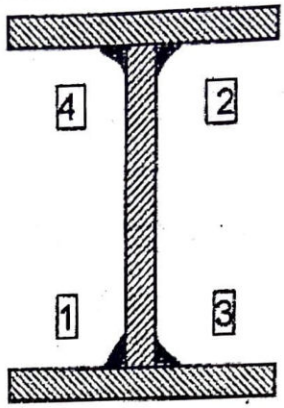


| | | | |
|---|---|---|---|
| 11 | Provision of run-on / run-off tabs | : | Yes |
| 12 | Cleaning of weld bead before laying next weld bead | : | N.A. |
| 13 | Root preparation before welding other side of groove weld | : | N.A. |
| 14 | Preheating and inter pass temperature | : | N.A. |
| 15 | Peening | : | N.A. |
| 16 | Post Weld treatment | : | N.A. |
| 17 | Rectification of weld defect | : | By re-welding after complete removal of defective weld as per 9595 of cl. 32.2 by A4 electrode. |
| 18 | Inspection of Weld | : | Visual, D.P. Test & Macro Etching |
| 19 | Any other relevant Details | : | Web with Top & Bottom Flange |

Appendix-V (Ref.CI.26 of B I-2001)

# Welding Procedure Specification Sheet for 25T Loading 18.3M Span Welded type Plate Girder

| | | | |
|---|---|---|---|
| Name and address of Fabricator | | : | M/s. BISWAJIT ENGINEERING.<br>Dhanmandal, Badachana, Jajpur-754024,Odisha. |
| Welding Procedure specification No. | | : | ITL-KEC(JV)/BE/RVNL/18.3M/03 Date- 03.04.2021 |
| 01. | Drawing No. | : | RDSO B-16015/R Series |
| 02. | Welding Joint Description. | : | Fillet 10 mm |
| 03. | Base Metal. | : | IS: 2062:2011, Gr.- B0. |
| 04. | Welding Process | : | GMAW (GMAW machine with CO2 Gas Cylinder.) |
| 05. | Welding Position. | : | Flat, Horizontal & Vertical. |
| 06. | Welding Consumable. | | |
| 6.1 | Electrode/Wire | | |
| | Class | : | 1 of IRS M.46/13 |
| | Type | : | Copper Coated Mild Steel solid Wire |
| | Drying Method | : | N.A. |
| 6.2 | Flux | | |
| | Class | : | N.A. |
| | Type | : | N.A. |
| | Drying Method | : | N.A. |
| 6.3 | Shielding Gas | : | CO2 |
| 07. | Base Metal Preparation | : | Fusion Faces and adjacent surfaces are cleaned and made free from Cracks, Notches, Mill scale, Grease, Paint, Rust etc., which may affected weld quality. |
| 7.1 | Joint design Details | : | |
| | (Sketch showing arrangements of parts, weld beads details, weld passes & their sequence etc.,)<br>Shown in End Stiff. Weld with Web & both Flange. | | 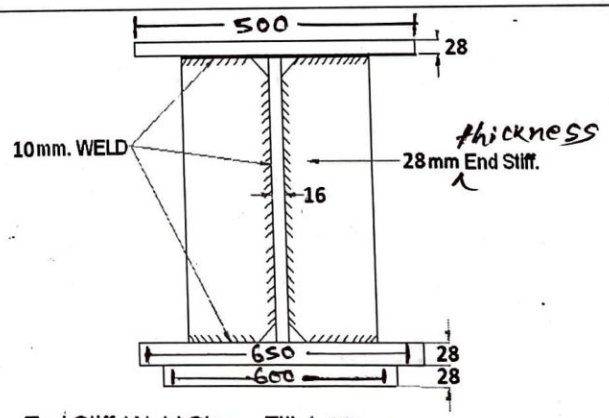 <br>End Stiff. Weld Size = Fillet 10 mm. |
| 7.2 | Joint preparation | : | As Per IS: 4353 – 1995, CI.7, IRS B1-2001, CI.17.3 & WBC – 2001. |
| 08. | Welding Current | : | |
| | Type | : | DC |
| | Polarity | : | Reverse |
| 09. | Welder qualification | : | As per IS: 7310/7307 (Part-I) – 1974 |
| 10. | Welding Parameters and technique | : | |
| 10.1 | Welding Parameters | : | |

20.10.21
सहायक अनुसंधान अधिकारी (धातु)
Assistant Research Officer (Met)
आर.डी.एस.ओ. रेल मंत्रालय लखनऊ-11

Appendix-V (Ref.CI.26 of BI-2001)

| Weld Pass No. | Electrodes wire dia. (mm) | Current (Amps) | Arc Voltage (Volt) | Wire Feed Speed (m/min) | Travel Speed (m/min) | Electrical Stick out (mm) | Gas Flow (I/min.) |
|---|---|---|---|---|---|---|---|
| 1 | 1.2 | 190-220 | 24-26 | 5-6 | N.A. | 13-16 | 18-20 |
| 2 | 1.2 | 200-220 | 24-26 | 5-6 | N.A. | 13-16 | 18-20 |

| | | | |
|---|---|---|---|
| 10.2 | Welding Sequence and technique | : | Welding from run on to run off tabs at the free ends. |

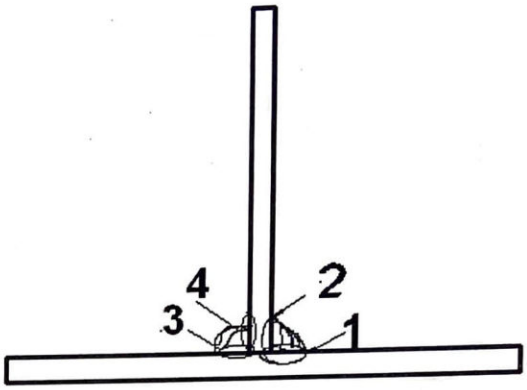


| | | | |
|---|---|---|---|
| 11. | Provision of run-on / run-off tabs | : | N.A. |
| 12. | Cleaning of weld bead before laying next weld bead | : | N.A. |
| 13. | Root preparation before welding other side of groove weld | : | N.A. |
| 14. | Preheating and inter pass temperature | : | N.A. |
| 15. | Peening | : | N.A. |
| 16. | Post Weld treatment | : | N.A. |
| 17. | Rectification of weld defect | : | By re-welding after complete removal of defective weld as per 9595 of cl. 32.2 by A2 electrode. |
| 18. | Inspection of Weld | : | Visual & D.P. Test |
| 19. | Any other relevant Details | : | End Stiff. |

Assistant Research Officer (Met)

Appendix-V (Ref.CI.26 of B I-2001)

# Welding Procedure Specification Sheet for 25T Loading 18.3M Span Welded type Plate Girder

| | | |
|---|---|---|
| Name and address of Fabricator | | M/s. BISWAJIT ENGINEERING.<br>Dhanmandal, Badachana, Jajpur-754024,Odisha. |
| Welding Procedure specification No. | | ITL-KEC(JV)/BE/RVNL/18.3M/04 Date- 03.04.2021 |
| 01. | Drawing No. | RDSO B-16015/R Series |
| 02. | Welding Joint Description. | Fillet 08 mm |
| 03. | Base Metal. | IS: 2062:2011, Gr.- B0. |
| 04. | Welding Process | GMAW (GMAW machine with CO2 Gas Cylinder.) |
| 05. | Welding Position. | Flat, Horizontal & Vertical. |
| 06. | Welding Consumable. | |
| 6.1 | Electrode/Wire | |
| | Class | 1 of IRS M.46/13 |
| | Type | Copper Coated Mild Steel solid Wire |
| | Drying Method | N.A. |
| 6.2 | Flux | |
| | Class | N.A. |
| | Type | N.A. |
| | Drying Method | N.A. |
| 6.3 | Shielding Gas | CO2 |
| 07. | Base Metal Preparation | Fusion Faces and adjacent surfaces are cleaned and made free from Cracks, Notches, Mill scale, Grease, Paint, Rust etc., which may affected weld quality. |
| 7.1 | Joint design Details | |
| | (Sketch showing arrangements of parts, weld beads details, weld passes & their sequence etc.,)<br>Shown in Welding of Int. Stiff. With Web not to be weld in flange. | 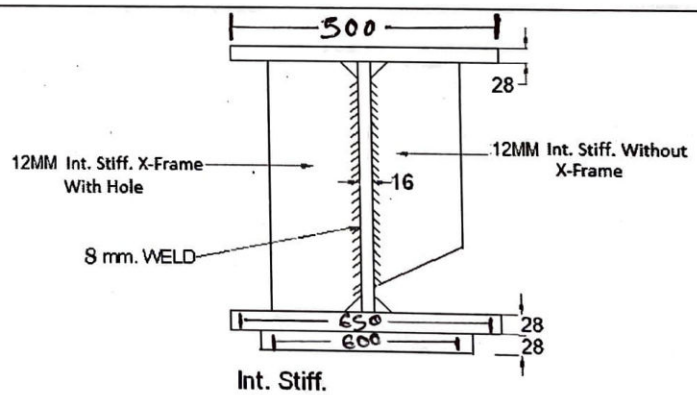 <br>Int. Stiff.<br>Weld Size = Fillet 8 mm. |
| 7.2 | Joint preparation | As Per IS: 4353 – 1995, CI.7, IRS B1-2001, CI.17.3 & WBC – 2001. |
| 08. | Welding Current | |
| | Type | DC |
| | Polarity | Reverse |
| 09. | Welder qualification | As per IS: 7310/7307 (Part-I) – 1974 |
| 10. | Welding Parameters and technique | |
| 10.1 | Welding Parameters | |

Appendix-V (Ref.CI.26 of BI-2001)

| Weld Pass No. | Electrodes wire dia. (mm) | Current (Amps) | Arc Voltage (Volt) | Wire Feed Speed (m/min) | Travel Speed (m/min) | Electrical Stick out (mm) | Gas Flow (I/min.) |
|---|---|---|---|---|---|---|---|
| 1 | 1.2 | 190-200 | 24-26 | 5-6 | N.A. | 13-16 | 16-18 |

| | | | |
|---|---|---|---|
| 10.2 | Welding Sequence and technique | : | Welding from run on to run off tabs at the free ends. |

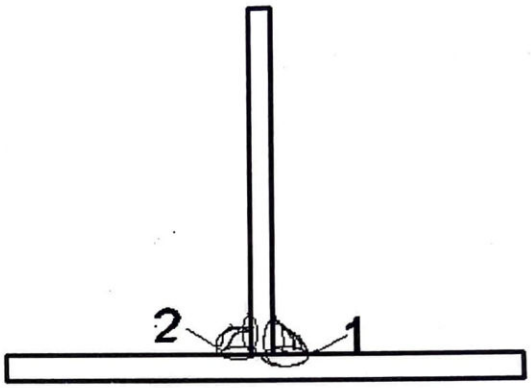


| | | | |
|---|---|---|---|
| 11. | Provision of run-on / run-off tabs | : | N.A. |
| 12. | Cleaning of weld bead before laying next weld bead | : | N.A. |
| 13. | Root preparation before welding other side of groove weld | : | N.A. |
| 14. | Preheating and inter pass temperature | : | N.A. |
| 15. | Peening | : | N.A. |
| 16. | Post Weld treatment | : | N.A. |
| 17. | Rectification of weld defect | : | By re-welding after complete removal of defective weld as per 9595 of cl. 32.2 by A2 electrode. |
| 18. | Inspection of Weld | : | Visual & D.P. Test |
| 19. | Any other relevant Details | : | Int. Stiff. |

20.10.20
सहायक अनुसंधान अधिकारी (धातु)
Assistant Research Officer (Met)
उ.म.रा.पु.बो. रेल मंत्रालय लखनऊ-11

Appendix-V (Ref.CI.26 of B I-2001)

## Welding Procedure Specification Sheet for 25T Loading 18.3M Span Welded type Plate Girder

| | | | |
|---|---|---|---|
| Name and address of Fabricator | | : | M/s. BISWAJIT ENGINEERING.<br>Dhanmandal, Badachana, Jajpur-754024,Odisha. |
| Welding Procedure specification No. | | : | ITL-KEC(JV)/BE/RVNL/18.3M/05 Date- 03.04.2021 |
| 01. | RDSO Drawing No. | : | RDSO B-16015/R Series |
| 02. | Welding Joint Description. | : | FILLET 4 mm. |
| 03. | Base Metal. | : | IS: 2062 – 2011 E250 Gr.-B0. |
| 04. | Welding Process | : | S.A.W. |
| 05. | Welding Position. | : | Flat |
| 06. | Welding Consumable. | | |
| 6.1 | Electrode/Wire | | |
| | Class | : | W1 of IRS M.39-2001. |
| | Type | : | Copper coated Mild Steel Wire. |
| | Drying Method | : | N.A. |
| 6.2 | Flux | | |
| | Class | : | F 1 or IRS M.39 – 2001 |
| | Type | : | Agglomerated. |
| | Drying Method | : | Recommendation as per manufacturer. |
| 6.3 | Shielding Gas | : | N.A. |
| 07. | Base Metal Preparation | : | Fusion Faces and adjacent surfaces are cleaned and made free from Cracks, Notches, Mill scale, Grease, Paint, Rust etc., which may affected weld quality. |
| 7.1 | Joint design Details | : | |
| | (Sketch showing arrangements of parts, weld bead details, weld passes & their sequence etc.,)<br>End Diaphragm Web Plate to Top/Bott. Flange Plate. | | 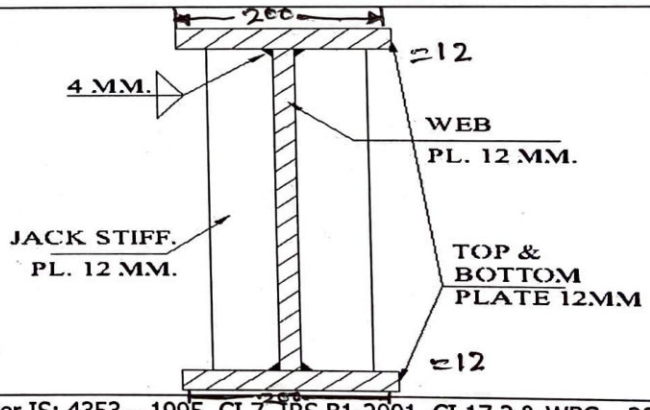 |
| 7.2 | Joint preparation | : | As Per IS: 4353 – 1995, CI.7, IRS B1-2001, CI.17.3 & WBC – 2001. |
| 08. | Welding Current | : | |
| | Type | : | DC |
| | Polarity | : | Reverse |
| 09. | Welder qualification | : | As per IS: 7310/7307 (Part-I) – 1974 |
| 10. | Welding Parameters and technique | : | |
| 10.1 | Welding Parameters | : | |

20.10.26
सहायक अनुसंधान अधिकारी (धातु)
Assistant Research Officer (Met.)
आ०अ०सं० रेल मंत्रालय लखनऊ-1

Appendix-V (Ref.Cl.26 of BI-2001)

| Weld Pass No. | Electrodes wire dia. (mm) | Current (Amps) | Arc Voltage (Volt) | Wire Feed Speed (m/min) | Travel Speed (m/min) | Electrical Stick out (mm) | Gas Flow (I/min.) |
|---|---|---|---|---|---|---|---|
| 1 | 3.15 | 450-500 | 26-28 | 1.6-2.0 | 0.70-0.80 | 15-20 | N.A. |

| | | | |
|---|---|---|---|
| 10.2 | Welding Sequence and technique | : | Welding from run on to run off tabs at the free ends. |

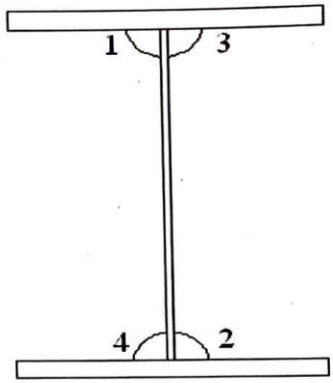


| | | | |
|---|---|---|---|
| 11. | Provision of run-on / run-off tabs | : | Yes |
| 12. | Cleaning of weld bead before laying next weld bead | : | N.A. |
| 13. | Root preparation before welding other side of groove weld | : | N.A. |
| 14. | Preheating and inter pass temperature | : | N.A. |
| 15. | Peening | : | N.A. |
| 16. | Post Weld treatment | : | N.A. |
| 17. | Rectification of weld defect | : | By re-welding after complete removal of defective weld as per 9595 of cl. 32.2 by A4 electrode. |
| 18. | Inspection of Weld | : | Visual, D.P. Test & Macro Etching |
| 19. | Any other relevant Details | : | Web with Top & Bottom Flange |

20.10.20
सहायक अनुसंधान अधिकारी (धातु)
Assistant Research Officer (Met)
रेल मंत्रालय लखनऊ-11

Appendix-V (Ref.CI.26 of B I-2001)

## Welding Procedure Specification Sheet for 25T Loading 18.3M Span Welded type Plate Girder

| | | | |
|---|---|---|---|
| Name and address of Fabricator | | : | M/s. BISWAJIT ENGINEERING.<br>Dhanmandal, Badachana, Jajpur-754024,Odisha. |
| Welding Procedure specification No. | | : | ITL-KEC(JV)/BE/RVNL/18.3M/06 Date- 03.04.2021 |
| 01. | RDSO Drawing No. | : | RDSO B-16015/R Series |
| 02. | Welding Joint Description. | : | FILLET 4 mm. |
| 03. | Base Metal. | : | IS: 2062 – 2011 E250 Gr.-B0. |
| 04. | Welding Process | : | GMAW (GMAW machine with CO2 Gas Cylinder.) |
| 05. | Welding Position. | : | Flat, Horizontal & Vertical. |
| 06. | Welding Consumable. | | |
| 6.1 | Electrode/Wire | | |
| | Class | : | 1 of IRS M 46/13 |
| | Type | : | Copper coated Solid Wire. |
| | Drying Method | : | N.A. |
| 6.2 | Flux | | |
| | Class | : | N.A. |
| | Type | : | N.A.. |
| | Drying Method | : | N.A. |
| 6.3 | Shielding Gas | : | $CO_2$ |
| 07. | Base Metal Preparation | : | Fusion Faces and adjacent surfaces are cleaned and made free from Cracks, Notches, Mill scale, Grease, Paint, Rust etc., which may affected weld quality. |
| 7.1 | Joint design Details | : | |
| | (Sketch showing arrangements of parts, weld bead details, weld passes & their sequence etc.,)<br>End Diaphragm stiff. Pl. to Web Pl. and Jacking Pl. to Bott. Flange Pl. | | 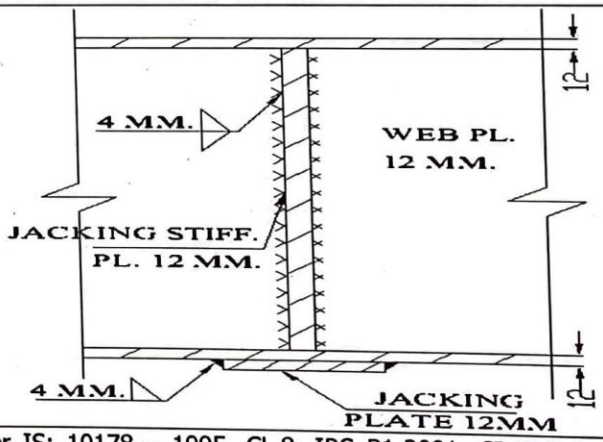 |
| 7.2 | Joint preparation | : | As Per IS: 10178 – 1995, CL.8, IRS B1-2001, CI.17.3 & WBC – 2001. |
| 08. | Welding Current | : | |
| | Type | : | DC |
| | Polarity | : | Reverse |
| 09. | Welder qualification | : | As per IS: 7310 /7307 (Part-I) – 1974 |
| 10. | Welding Parameters and technique | : | |
| 10.1 | Welding Parameters | : | |

सहायक अनुसंधान अधिकारी (धातु)
Assistant Research Officer (Met)
दक्षिण पूर्व मध्य रेल्वे, बिलासपुर

| Weld Pass No. | Electrodes wire dia. (mm) | Current (Amps) | Arc Voltage (Volt) | Wire Feed Speed (m/min) | Travel Speed (m/min) | Electrical Stick out (mm) | Gas Flow (I/min.) |
|---|---|---|---|---|---|---|---|
| 1 | 1.2 | 200-230 | 24 – 26 | 5-6 | N.A. | 15 – 20 | 16-18 |

| | | | |
|---|---|---|---|
| 10.2 | Welding Sequence and technique | : | 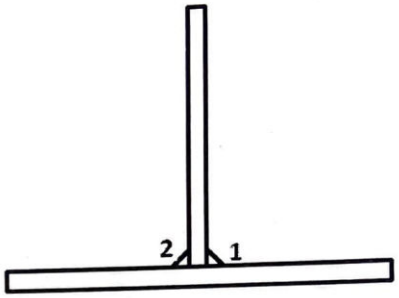  |
| 11 | Provision of run-on / run-off tabs | : | N.A. |
| 12 | Cleaning of weld bead before laying next weld bead | : | By brush cleaning and grinding |
| 13 | Root preparation before welding other side of groove weld | : | N.A. |
| 14 | Preheating and inter pass temperature | : | N.A. |
| 15 | Peening | : | N.A. |
| 16 | Post Weld treatment | : | N.A. |
| 17 | Rectification of weld defect | : | By grinding of the defective weld & rectify the weld as per Cl.32.2 of IS 9595-96, using A4 class of electrodes of specn. IRS M.28-02, after conducting DP Test. |
| 18 | Inspection of Weld | : | Visual & D.P.Test. |
| 19 | Any other relevant Details | : | Jacking Plate & End Diph. Stiff. Plate. |

Assistant Research Officer (Met)

Appendix-V (Ref.CI.26 of B I-2001)

## Welding Procedure Specification Sheet for 25T Loading 18.3M Span Welded type Plate Girder

| | | | |
|---|---|---|---|
| Name and address of Fabricator | | : | M/s. BISWAJIT ENGINEERING.<br>Dhanmandal, Badachana, Jajpur-754024,Odisha. |
| Welding Procedure specification No. | | : | ITL-KEC(JV)/BE/RVNL/18.3M/07 Date- 03.04.2021 |
| 01. | RDSO Drawing No. | : | RDSO B-16015/R Series |
| 02. | Welding Joint Description. | : | FILLET 08 mm. |
| 03. | Base Metal. | : | IS: 2062 – 2011 E250 Gr.-B0, for plate Br/B0 for angle. |
| 04. | Welding Process | : | GMAW (GMAW machine with CO2 Gas Cylinder.) |
| 05. | Welding Position. | : | Flat, Horizontal & Vertical. |
| 06. | Welding Consumable. | | |
| 6.1 | Electrode/Wire | | |
| | Class | : | 1 of IRS M 46/13 |
| | Type | : | Copper coated Solid Wire. |
| | Drying Method | : | N.A. |
| 6.2 | Flux | | |
| | Class | : | N.A. |
| | Type | : | N.A. |
| | Drying Method | : | N.A. |
| 6.3 | Shielding Gas | : | $CO_2$ |
| 07. | Base Metal Preparation | : | Fusion Faces and adjacent surfaces are cleaned and made free from Cracks, Notches, Mill scale, Grease, Paint, Rust etc., which may affected weld quality. |
| 7.1 | Joint design Details | : | |
| | (Sketch showing arrangements of parts, weld bead details, weld passes & their sequence etc.,)<br>Int. X-Frame angle bracing To gusset plate. | : | 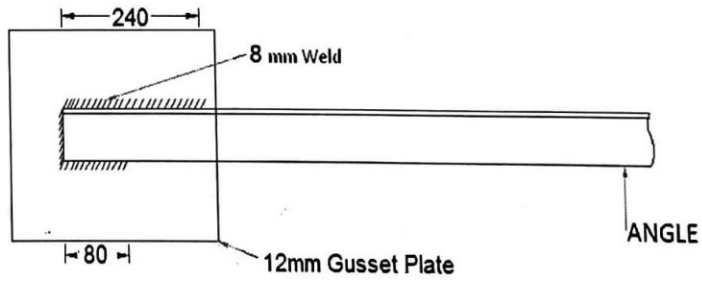 |
| 7.2 | Joint preparation | : | As Per IS: 10178 – 1995, CL.8, IRS B1-2001, CI.17.3 & WBC – 2001. |
| 08. | Welding Current | : | |
| | Type | : | DC |
| | Polarity | : | Reverse |
| 09. | Welder qualification | : | As per IS: 7310 /7307 (Part-I) – 1974 |
| 10. | Welding Parameters and technique | : | |
| 10.1 | Welding Parameters | : | |

Assistant Research Officer (Met)

Appendix-V (Ref.CI.26 of BI-2001)

| Weld Pass No. | Electrodes wire dia. (mm) | Current (Amps) | Arc Voltage (Volt) | Wire Feed Speed (m/min) | Travel Speed (m/min) | Electrical Stick out (mm) | Gas Flow (I/min.) |
|---|---|---|---|---|---|---|---|
| 1 | 1.2 | 200-220 | 24 – 26 | 5-6 | N.A. | 12 – 15 | 16-18 |

| | | | |
|---|---|---|---|
| 10.2 | Welding Sequence and technique | : | |

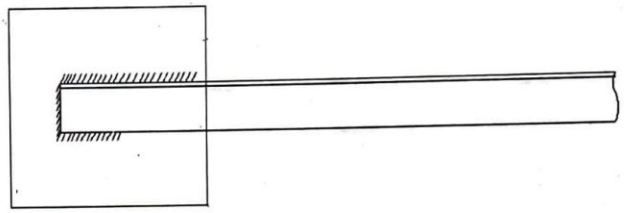

| | | | |
|---|---|---|---|
| 11. | Provision of run-on / run-off tabs | : | N.A. |
| 12. | Cleaning of weld bead before laying next weld bead | : | By brush cleaning and grinding |
| 13. | Root preparation before welding other side of groove weld | : | N.A. |
| 14. | Preheating and inter pass temperature | : | N.A. |
| 15. | Peening | : | N.A. |
| 16. | Post Weld treatment | : | N.A. |
| 17. | Rectification of weld defect | : | By grinding of the defective weld & rectify the weld as per Cl.32.2 of IS 9595-96, using A4 class of electrodes of specn. IRS M.28-02, after conducting DP Test. |
| 18. | Inspection of Weld | : | Visual & D.P.Test. |
| 19. | Any other relevant Details | : | Gusset with bracing |

Assistant Research Officer (Met)

Appendix-V (Ref.CI.26 of B I-2001)

## Welding Procedure Specification Sheet for 25T Loading 18.3M Span Welded type Plate Girder

| | | | |
|---|---|---|---|
| Name and address of Fabricator | | : | M/s. BISWAJIT ENGINEERING.<br>Dhanmandal, Badachana, Jajpur-754024,Odisha. |
| Welding Procedure specification No. | | : | ITL-KEC(JV)/BE/RVNL/18.3M/08 Date- 03.04.2021 |
| 01. | RDSO Drawing No. | : | RDSO B-16015/R Series |
| 02. | Welding Joint Description. | : | Tack Weld (5 mm.) |
| 03. | Base Metal. | : | IS: 2062 – 2011 E250 Gr.-B0. , for plate Br/B0 for angle. |
| 04. | Welding Process | : | M.M.A.W. |
| 05. | Welding Position. | : | Horizontal Vertical |
| 06. | Welding Consumable. | | |
| 6.1 | Electrode/Wire | | A4 of IRS M.28-2002,with Amendenment-1 of 2003 |
| | Class | : | Medium/Heavy Coated. |
| | Type | : | As recommended by the Electrode Manufacturer. |
| | Drying Method | : | |
| 6.2 | Flux | | |
| | Class | : | N.A. |
| | Type | : | N.A. |
| | Drying Method | : | N.A. |
| 6.3 | Shielding Gas | : | N.A. |
| 07. | Base Metal Preparation | : | Fusion Faces and adjacent surfaces are cleaned and made free from Cracks, Notches, Mill scale, Grease, Paint, Rust etc., which may affected weld quality. |
| 7.1 | Joint design Details | : | |
| | (Sketch showing arrangements of parts, weld bead details, weld passes & their sequence etc.,) | | Length of tack Weld 50mm<br>Gap between two tack Weld appr.300mm<br>Weld Size |
| 7.2 | Joint preparation | : | As Per IS: 4353 – 1995, CI.7, IRS B1-2001, CI.17.3, WBC – 2001& IRSM-28. |
| 08. | Welding Current | : | |
| | Type | : | DC |
| | Polarity | : | Reverse |
| 09. | Welder qualification | : | As per IS: 7310/7307 (Part-I) – 1974 |
| 10. | Welding Parameters and technique | : | |
| 10.1 | Welding Parameters | : | |

Assistant Research Officer (Met)

Appendix-V (Ref.CI.26 of BI-2001)

| Weld Pass No. | Electrodes wire dia. (mm) | Current (Amps) | Arc Voltage (Volt) | Wire Feed Speed (m/min) | Travel Speed (m/min) | Electrical Stick out (mm) | Gas Flow (I/min.) |
|---|---|---|---|---|---|---|---|
| 1 | 4 | 210-240 | 24-27 | N.A. | N.A. | N.A. | N.A. |

| | | | |
|---|---|---|---|
| 10.2 | Welding Sequence and technique, | : | N.A. |

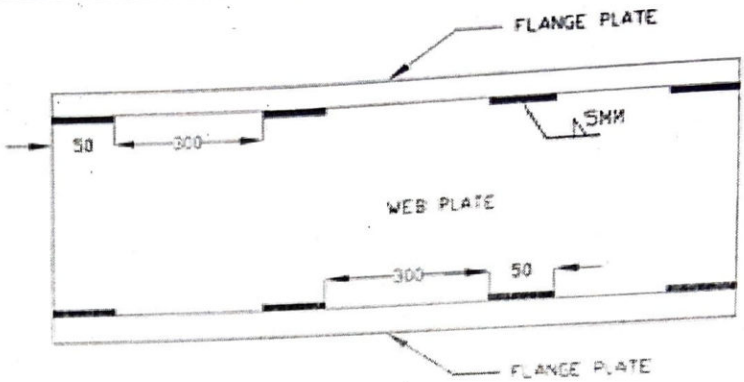


| | | | |
|---|---|---|---|
| 11. | Provision of run-on / run-off tabs | : | N.A. |
| 12. | Cleaning of weld bead before laying next weld bead | : | N.A. |
| 13. | Root preparation before welding other side of groove weld | : | N.A. |
| 14. | Preheating and inter pass temperature | : | N.A. |
| 15. | Peening | : | N.A. |
| 16. | Post Weld treatment | : | N.A. |
| 17. | Rectification of weld defect | : | By re-welding after complete removal of defective weld. |
| 18. | Inspection of Weld | : | Visual & D.P. Test. |
| 19. | Any other relevant Details | : | Tack welds of all welded components. |

20.10.21
सहायक अनुसंधान अधिकारी (धातु)
Assistant Research Officer (Met)
रा.म.प्र.प्रा.के. रेल मंत्रालय लखनऊ-11

# Railway Plate Girder (25t loading)
# 24.4m clear span
# MODEL WPSS No- RDSO/ Infra-II/ B&S/ RG/ PG./ WPSS / 24.4 series (9 nos)

597
2x 24.4PG
B-16076
9No WPSS

# WELDING PROCEDURE SPECIFICATION SHEET

Name of Work: REGARDING OF BR. NO:-83T SPAN (2X23.985) M BY RDSO STANDARD GIRDER OF SPAN 2X24.4M AT KM 81/3-4 IN BETWEEN SECTION BANGAON -PETRAPOL OVER (CHAMATI RIVER OF SEALDAH DIVISION)

Name & address of fabricator: VRINDA ENGINEERS PVT LTD
KANKORA, PANAGARH, BURDWAN 713148.

Welding Procedure Specification No: VEPL/PETRAPOL/24m/WPSS/01/R0

1. RDSO Drawing No. : RDSO/B-16016/R, # Main Girder
   Section on A-A
   1st Bott.Plt. To 2nd Bott. Plt.
2. Weld joint description : Fillet
3. Base Metal : IS 2062 – 11, Gr.E250B0, fully killed.fully Normalized/Control cooled
4. Welding Process : S.A.W
5. Welding Position : Flat
6. Welding Consumable

6.1 Electrode/Wire : Class : W1 of IRS M.39 – 2001
Type : Copper coated mild steel wire
Drying method : N.A

6.2 Flux : Class : F1 of IRS M.39 – 2001
Type : Agglomerated
Drying method : 250$^0$C for one hour before use

6.3 Shielding Gas : N.A

7. Base metal preparation : Fusion faces and adjacent surfaces are cleaned and made free from cracks, notches, mill scale, grease, paint, rust etc., which may affect weld quality.

7.1 Joint design details :
( Sketch showing arrangements of parts, weld groove details, wel passes & their sequence etc., )

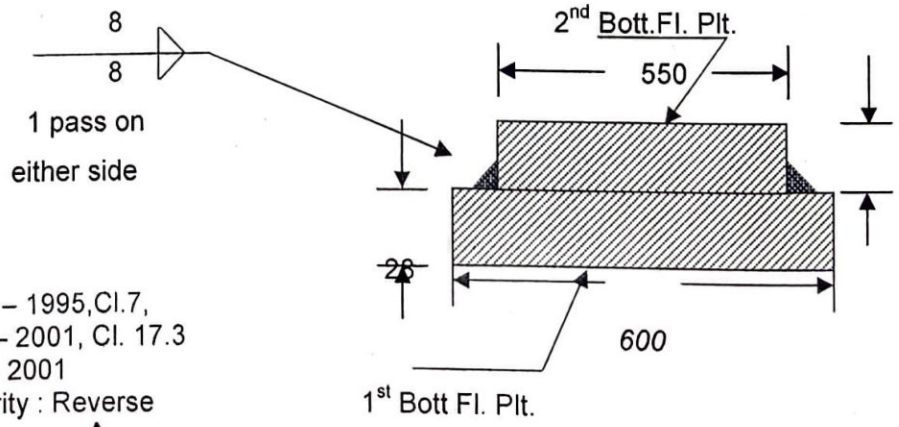


28

7.2 Joint preparation : As per IS 4353 – 1995,Cl.7,
IRS B1 – 2001, Cl. 17.3
& WBC - 2001

8. Welding Current : Type : DC, Polarity : Reverse

Assistant Research Officer (Mi

596

9. Welder Qualification : As per IS 7310 (Part I) – 1974

10. Welding parameters and technique :

10.1 Welding Parameters :

| Weld Pass | Electrode/ Wire dia. (mm) | Current (Amps) | Arc Voltage (volt) | Wire feed Speed (m/min) | Travel Speed (m/min) | Electrode Stickout (mm) | Gas flow (l/min) |
|---|---|---|---|---|---|---|---|
| 1 | 4 | 500-550 | 28-30 | 1.2-1.4 | 0.55-0.60 | 15-20 | N.A |

10.2 Welding sequence and technique : Welding from run-on to run off tabs at the free ends.

11 Provision of run-on / run-off tabs : Yes

12. Cleaning of weld bead before laying of next weld bead : N.A

13. Root preparation before welding other side of groove weld : N.A

14. Preheating and interpass temperature : N.A

15. Peening : N.A

16. Post weld treatment : N.A

17. Rectification of weld defect : By grinding of the defective weld and rectify the weld as per Cl. 32.2 of IS:9595-96 using A3 class of Electrode of Specn. IRS M.28-12, after conducting DP Test.

18. Inspection of weld : Visual, D.P Test & Macro Etching

19. Any other relevant detail : None

सहायक अनुसंधान अधिकारी (धातु
Assistant Research Officer (Me
उ०म०पा०सं० रेल मन्त्रालय लखनऊ

595

# WELDING PROCEDURE SPECIFICATION SHEET

Name of Work: REGARDING OF BR. NO:-83T SPAN (2X23.985) M BY RDSO STANDARD GIRDER OF SPAN 2X24.4M AT KM 81/3-4 IN BETWEEN SECTION BANGAON -PETRAPOL OVER (CHAMATI RIVER OF SEALDAH DIVISION)

Name & address of fabricator: VRINDA ENGINEERS PVT LTD
KANKORA, PANAGARH, BURDWAN 713148.

Welding Procedure Specification No: VEPL/PETRAPOL/24m/WPSS/02/R0

7. RDSO Drawing No. : RDSO/B-16016/R, # Main Girder
Section on A-A
1st Top.Plt. To 2nd Top. Plt.

8. Weld joint description : Fillet

9. Base Metal : IS 2062 – 11, Gr.E250B0, fully killed.fully Normalized/Control cooled

10. Welding Process : S.A.W

11. Welding Position : Flat

12. Welding Consumable

6.1 Electrode/Wire : Class : W1 of IRS M.39 – 2001
Type : Copper coated mild steel wire
Drying method : N.A

6.2 Flux : Class : F1 of IRS M.39 – 2001
Type : Agglomerated
Drying method : 250$^0$C for one hour before use

6.3 Shielding Gas : N.A

7. Base metal preparation : Fusion faces and adjacent surfaces are cleaned and made free from cracks, notches, mill scale, grease, paint, rust etc., which may affect weld quality.

7.2 Joint design details :
( Sketch showing arrangements of parts, weld groove details, wel passes & their sequence etc., )

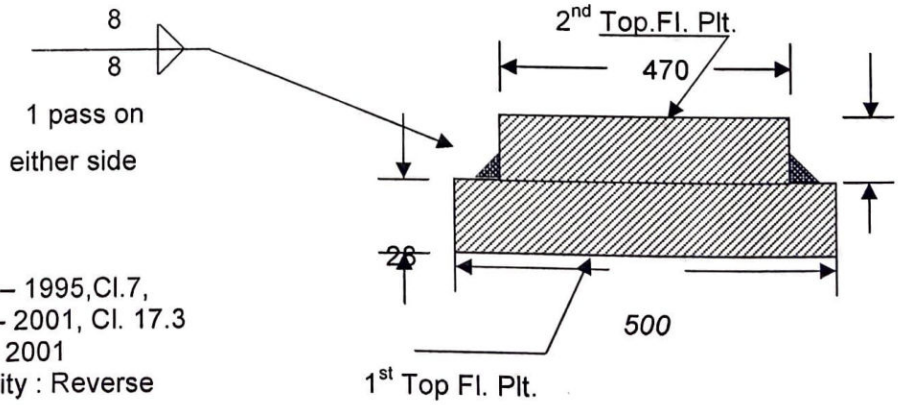


28

7.2 Joint preparation : As per IS 4353 – 1995,Cl.7,
IRS B1 – 2001, Cl. 17.3
& WBC - 2001

8. Welding Current : Type : DC, Polarity : Reverse

Assistant Research Officer (M

9. Welder Qualification : As per IS 7310 (Part I) – 1974

10. Welding parameters and technique :

10.1 Welding Parameters :

| Weld Pass | Electrode/ Wire dia. (mm) | Current (Amps) | Arc Voltage (volt) | Wire feed Speed (m/min) | Travel Speed (m/min) | Electrode Stickout (mm) | Gas flow (l/min) |
|---|---|---|---|---|---|---|---|
| 1 | 4 | 500-550 | 28-30 | 1.2-1.4 | 0.55-0.60 | 15-20 | N.A |

10.2 Welding sequence and technique : Welding from run-on to run off tabs at the free ends.

11 Provision of run-on / run-off tabs : Yes

12. Cleaning of weld bead before laying of next weld bead : N.A

13. Root preparation before welding other side of groove weld : N.A

14. Preheating and interpass temperature : N.A

15. Peening : N.A

16. Post weld treatment : N.A

17. Rectification of weld defect : By grinding of the defective weld and rectify the weld as per Cl. 32.2 of IS:9595-96 using A3 class of Electrode of Specn. IRS M.28-12, after conducting DP Test.

18. Inspection of weld : Visual, D.P Test & Macro Etching

19. Any other relevant detail : None

सहायक अनुसंधान अधिकारी (धातु
Assistant Research Officer (Me
रे०वि०पा०सं० रेल मंत्रालय लखनऊ

593

# WELDING PROCEDURE SPECIFICATION SHEET

Name of Work: REGARDING OF BR. NO:-83T SPAN (2X23.985) M BY RDSO STANDARD GIRDER OF SPAN 2X24.4M AT KM 81/3-4 IN BETWEEN SECTION BANGAON -PETRAPOL OVER (CHAMATI RIVER OF SEALDAH DIVISION)

Name & address of fabricator: VRINDA ENGINEERS PVT LTD
KANKORA, PANAGARH, BURDWAN 713148.

Welding Procedure Specification No: VEPL/PETRAPOL/24m/WPSS/03/R0

1. RDSO Drawing No. : RDSO/B-16016/R, # Main Girder
   Section on A-A
   Flg.Plt. To Web. Plt.
1. Weld joint description : Fillet
2. Base Metal : IS 2062 – 11, Gr.E250B0, fully killed.fully normalized cooled
3. Welding Process : S.A.W
4. Welding Position : Flat
5. Welding Consumable

6.1 Electrode/Wire : Class : W1 of IRS M.39 – 2001
Type : Copper coated mild steel wire
Drying method : N.A

6.2 Flux : Class : F1 of IRS M.39 – 2001
Type : Agglomerated
Drying method : 250°C for one hour before use

6.3 Shielding Gas : N.A

7. Base metal preparation : Fusion faces and adjacent surfaces are cleaned and made free from cracks, notches, mill scale, grease, paint, rust etc., which may affect weld quality.

7.1 Joint design details :
( Sketch showing arrangements of parts, weld groove details, weld passes & their sequence etc., )

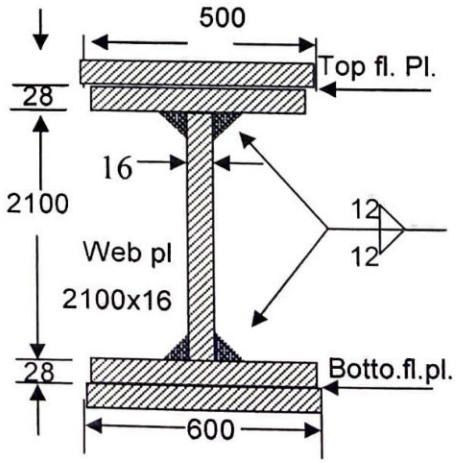


7.2 Joint preparation : As per IS 4353 – 1995,Cl.7
IRS B1 – 2001, Cl.17
& WBC – 2001

8. Welding Current : Type : DC, Polarity : Reverse

सहायक अनुसंधान अधिकारी (पाषु
Assistant Research Officer (
उ०पू०रे० रेल पथपथ प्रभाग

592

9. Welder Qualification : As per IS 7310 (Part I) – 1974

10. Welding parameters and technique :

10.1 Welding Parameters :

| Weld Pass | Electrode/ Wire dia. (mm) | Current (Amps) | Arc Voltage (volt) | Wire feed Speed (m/min) | Travel Speed (m/min) | Electrode Stickout (mm) | Gas flow (l/min) |
|---|---|---|---|---|---|---|---|
| 1 | 3.15 | 450-500 | 25-29 | 1.0-1.2 | 0.45-0.50 | 15-20 | N.A |

10.2 Welding sequence and technique : Welding from run-on to run off tabs at the free ends.

11 Provision of run-on / run-off tabs : Yes

12. Cleaning of weld bead before laying of next weld bead : N.A

2

13. Root preparation before welding other side of groove weld : N.A

14. Preheating and interpass temperature : N.A

15. Peening : N.A

3

16. Post weld treatment : N.A

*Welding Sequence:*

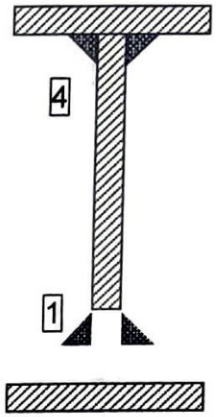


17. Rectification of weld defect : By grinding of the defective weld and rectify the weld as per Cl.32.2 of IS:9595-96 using A3 class of Electrodes of Specn. IRS M.28-12 after conducting DP Test.

18. Inspection of weld : Visual, D.P Test & Macro Etching

19. Any other relevant detail : None

591

# WELDING PROCEDURE SPECIFICATION SHEET

Name of Work: REGARDING OF BR. NO:-83T SPAN (2X23.985) M BY RDSO STANDARD GIRDER OF SPAN 2X24.4M AT KM 81/3-4 IN BETWEEN SECTION BANGAON -PETRAPOL OVER (CHAMATI RIVER OF SEALDAH DIVISION)

Name & address of fabricator: VRINDA ENGINEERS PVT LTD
KANKORA, PANAGARH, BURDWAN 713148.

Welding Procedure Specification No: VEPL/PETRAPOL/24m/WPSS/04/R0

1. 1.RDSO Drawing No. : RDSO/B-16016/R, # End Diaphragm Flg.Plt. To Web. Plt.
2. Weld joint description : Fillet
3. Base Metal : IS 2062 – 11, Gr.E250B0, fully killed.fully normalized cooled
4. Welding Process : S.A.W
5. Welding Position : Flat
6. Welding Consumable

6.1 Electrode/Wire : Class : W1 of IRS M.39 – 2001
Type : Copper coated mild steel wire
Drying method : N.A

6.2 Flux : Class : F1 of IRS M.39 – 2001
Type : Agglomerated
Drying method : 250°C for one hour before use

6.3 Shielding Gas : N.A

7. Base metal preparation : Fusion faces and adjacent surfaces are cleaned and made free from cracks, notches, mill scale, grease, paint, rust etc., which may affect weld quality.

7.2 Joint design details : ( Sketch showing arrangements of parts, weld groove details, weld passes & their sequence etc., )

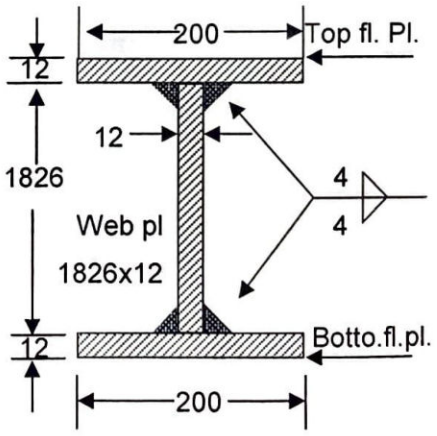

End Diaphragm

7.2 Joint preparation : As per IS 4353 – 1995,Cl.7
IRS B1 – 2001, Cl.17
& WBC – 2001

8. Welding Current : Type : DC, Polarity : Reverse



9. Welder Qualification : As per IS 7310 (Part I) – 1974

10. Welding parameters and technique :

10.1 Welding Parameters :

सहायक इंजीनियर (सेतु लाईन)

सहायक अनुसंधान अधिकारी (पा.
Assistant Research Officer (I.
दक्षिण पूर्व रेल्वे

590

| Weld Pass | Electrode/ Wire dia. (mm) | Current (Amps) | Arc Voltage (volt) | Wire feed Speed (m/min) | Travel Speed (m/min) | Electrode Stickout (mm) | Gas flow (l/min) |
|---|---|---|---|---|---|---|---|
| 1 | 3.15 | 450-500 | 25-29 | 1.0-1.2 | 0.45-0.50 | 15-20 | N.A |

10.2 Welding sequence and technique : Welding from run-on to run off tabs at the free ends.

11 Provision of run-on / run-off tabs : Yes

12. Cleaning of weld bead before laying of next weld bead : N.A

2

13. Root preparation before welding other side of groove weld : N.A

14. Preheating and interpass temperature : N.A

15. Peening : N.A

3

16. Post weld treatment : N.A

17. Rectification of weld defect : By grinding of the defective weld and rectify the weld as per Cl.32.2 of IS:9595-96 using A3 class of Electrodes of Specn. IRS M.28-12 after conducting DP Test.

18. Inspection of weld : Visual, D.P Test & Macro Etching

19. Any other relevant detail : None

*Welding Sequence:*

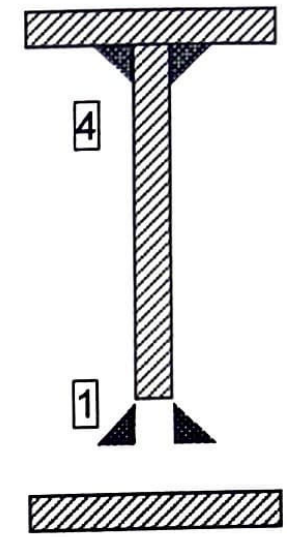

583

# WELDING PROCEDURE SPECIFICATION SHEET

Name of Work: REGARDING OF BR. NO:-83T SPAN (2X23.985) M BY RDSO STANDARD GIRDER OF SPAN 2X24.4M AT KM 81/3-4 IN BETWEEN SECTION BANGAON -PETRAPOL OVER (CHAMATI RIVER OF SEALDAH DIVISION)

Name & address of fabricator: VRINDA ENGINEERS PVT LTD
KANKORA, PANAGARH, BURDWAN 713148.

Welding Procedure Specification No: VEPL/PETRAPOL/24m/WPSS/05/R0

1. RDSO Drawing No. : RDSO/B-16016/2R,End Diaphragm
2. Weld joint description : 4 mm Fillet-Web Plt. to Jacking Stiff. Plt.
3. Base Metal : IS 2062 – 11, Gr.E250B0, Fully Killed & Fully Normalized.
4. Welding Process : GMAW
5. Welding Position : Horizontal
6. Welding Consumable
   a. Electrode/Wire : Class: 1 of IRS M.46/13
   b. Type: : Copper coated mild steel wire
      Drying method: N.A
   c. Flux : ------.
   d. Shielding Gas : $CO_2$
7. Base metal preparation : Fusion faces and adjacent surfaces are cleaned and made free from cracks, notches, mill scale, grease, paint, rust etc., which may affect weld quality.

7.3 Joint design details (Sketch showing arrangements of parts, weld groove details, weld passes & their sequence etc.) :

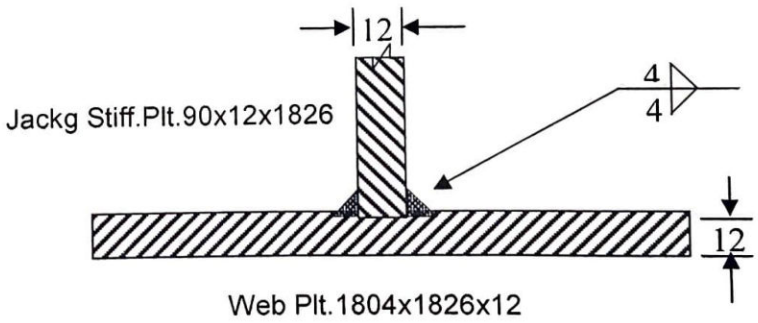


7.4 Joint preparation : As per IS 10178 Cl.8, IRS B1 – 2001, Cl. 17.3 & WBC – 2001.

8. Welding Current : Type : DC, Polarity : Reverse

9. Welder's Qualification : As per IS 7310 (Part I) – 1974

सहायक अनुसंधान अधिकारी (वागु
Assistant Research Officer (M
अनुसंधान एवं रेल मन्त्रालय लखनऊ

500

10. Welding parameters and technique :

10.1 Welding Parameters :

| Weld Pass | Electrode/ Wire dia. (mm) | Current (Amps) | Arc Voltage (volt) | Travel Speed (m/min) | Electrode Stickout (mm) | Gas flow (l/min) |
|---|---|---|---|---|---|---|
| 1 | 1.2 | 230-250 | 28-30 | 0.25 – 0.35 | 15 | 16-18 |

10.2 Welding sequence and technique : One end to another end.

(Sketch showing sequence and direction of welding)

11. Provision of run-on / run-off tabs : N.A

12. Cleaning of weld bead before laying of next weld bead : N.A

13. Root preparation before welding other side of groove weld : N.A

14. Preheating and interpass temperature : N.A

15. Peening : N.A

16. Post weld treatment : N.A

17. Rectification of weld defect : By grinding of the defective weld and rectifying the weld as per A3 of IRS M-28-12 after conducting DP Test.

18. Inspection of weld : Visual, D.P Test.

19. Any other relevant detail : None

507

# WELDING PROCEDURE SPECIFICATION SHEET

Name of Work: REGARDING OF BR. NO:-83T SPAN (2X23.985) M BY RDSO STANDARD GIRDER OF SPAN 2X24.4M AT KM 81/3-4 IN BETWEEN SECTION BANGAON -PETRAPOL OVER (CHAMATI RIVER OF SEALDAH DIVISION)

Name & address of fabricator: VRINDA ENGINEERS PVT LTD
KANKORA, PANAGARH, BURDWAN 713148.

Welding Procedure Specification No: VEPL/PETRAPOL/24m/WPSS/06/R0

1. RDSO Drawing No. : RDSO/B-16016/2R,End Diaphragm
Bott.Flng To Pad – Jacking Point Location
1. Weld joint description : Fillet
2. Base Metal : IS 2062 – 11, Gr.E250B0, fully killed.fully Normalized/Control cooled
3. Welding Process : G.M.A.W
4. Welding Position : Horizontal - Vertical
5. Welding Consumable

6.1 Electrode/Wire : Class : I of IRS M.46 – 13
Type : Copper coated mild steel wire
Drying method : N.A

6.2 Flux : Class : N.A
Type : N.A
Drying method : N.A

6.3 Shielding Gas : $CO^2$

7. Base metal preparation : Fusion faces and adjacent surfaces are cleaned and made free from cracks, notches, mill scale, grease, paint, rust etc., which may affect weld quality.

*7..1* Joint design details
*( Sketch showing* arrangements of parts, 200x12x185 weld groove details, weld passes & their sequence etc., )

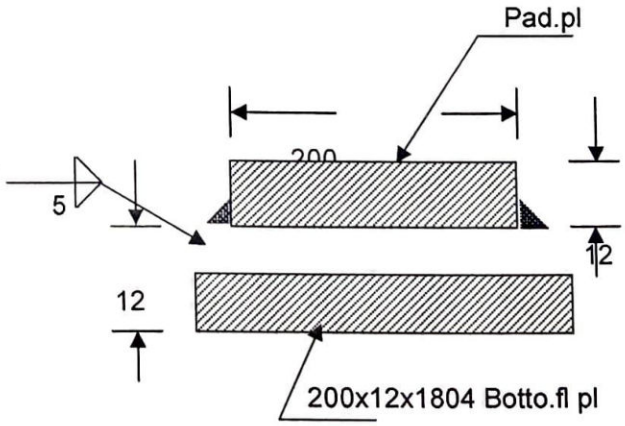


7.2 Joint preparation : As per IS 10178 – 1995,Cl
IRS B1 – 2001, Cl. 17.3
& WBC - 2001

8. Welding Current : Type : DC, Polarity : Reverse

Page 06/1

9. Welder Qualification : As per IS 7310 (Part I) – 1974

10. Welding parameters and technique :

10.1 Welding Parameters :

सहायक अनुसंधान अधिकारी (सेतु)
Assistant Research Officer (Br)
पू०म०रा०पं० रेल अनुसंधान संगठन

मुख्य इंजीनियर (सेतु लाईन)

506

| Weld Pass | Electrode/ Wire dia. (mm) | Current (Amps) | Arc Voltage (volt) | Wire feed Speed (m/min) | Travel Speed (m/min) | Electrode Stickout (mm) | Gas flow (l/min) |
|---|---|---|---|---|---|---|---|
| 1 | 1.2 | 200-220 | 24-26 | 0.50-0.55 | N.A | 12-15 | 15-18 |

10.2 Welding sequence and technique : Welding from run-on to run off tabs at the free ends.

11. Provision of run-on / run-off tabs : Yes

12. Cleaning of weld bead before laying of next weld bead : N.A

13. Root preparation before welding other side of groove weld : N.A

14. Preheating and interpass temperature : N.A

15. Peening : N.A

16. Post weld treatment : N.A

17. Rectification of weld defect : By grinding of the defective weld and rectify the weld as per Cl.32.2 of IS:9595-96, using A3 class of Electrodes of Specn. IRS M.28-12 after conducting DP Test.

18. Inspection of weld : Visual, D.P Test & Macro Etching

19. Any other relevant detail : None

585

# WELDING PROCEDURE SPECIFICATION SHEET

Name of Work: REGARDING OF BR. NO:-83T SPAN (2X23.985) M BY RDSO STANDARD GIRDER OF SPAN 2X24.4M AT KM 81/3-4 IN BETWEEN SECTION BANGAON -PETRAPOL OVER (CHAMATI RIVER OF SEALDAH DIVISION)

Name & address of fabricator: VRINDA ENGINEERS PVT LTD
KANKORA, PANAGARH, BURDWAN 713148.

Welding Procedure Specification No: VEPL/PETRAPOL/24m/WPSS/07/R0

1. RDSO Drawing No. : RDSO/B-16016/R,Main Girder, End Stiffener
2. Weld joint description : 10 mm Fillet-Web Plt. to End Stiffener. Plt. (16 mm & 28 mm)
3. Base Metal : IS 2062 – 11, Gr. E250B0, Fully Killed & Fully Normalized.
4. Welding Process : GMAW
5. Welding Position : Horizontal/vertical
6. Welding Consumable
   a. Electrode/Wire : Class: 1 of IRS M.46/13.
      Type: Copper coated mild steel wire
      Drying method: N.A
   b. Flux : ------.
   c. Shielding Gas : $CO_2$
7. Base metal preparation : Fusion faces and adjacent surfaces are cleaned and made free from cracks, notches, mill scale, grease, paint, rust etc., which may affect weld quality.

10.3 Joint design details (Sketch showing arrangements of parts, weld groove details, weld passes & their sequence etc.) :

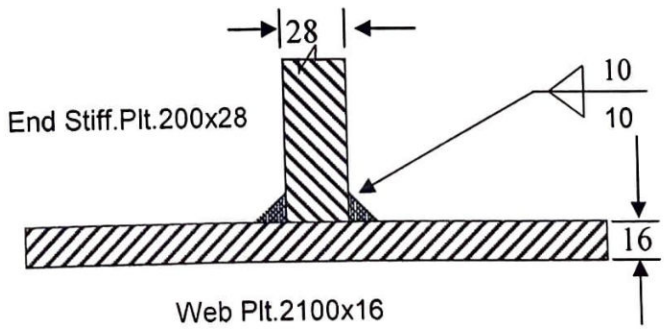


10.4 Joint preparation : As per IS 10178 Cl.8, IRS B1 – 2001, Cl. 17.3 & WBC – 2001.

8. Welding Current : Type : DC, Polarity : Reverse

07/10/2020
सहायक अनुसंधान अधिकारी (पाल
Assistant Research Officer (P
मु०पू० रेल बनाम सह

9. Welder's Qualification : As per IS 7310 (Part I) – 1974

10. Welding parameters and technique :

13.1 Welding Parameters :

| Weld Pass | Electrode/ Wire dia. (mm) | Current (Amps) | Arc Voltage (volt) | Travel Speed (m/min) | Electrode Stickout (mm) | Gas flow (l/min) |
|---|---|---|---|---|---|---|
| 1 | 1.2 | 230-250 | 28-30 | 0.25 – 0.35 | 15 | 16-18 |
| 2 | 1.2 | 230-250 | 28-30 | 0.25 – 0.35 | 15 | 16-18 |
| 3 | 1.2 | 230-250 | 28-30 | 0.25 – 0.35 | 15 | 16-18 |

13.2 Welding sequence and technique : One end to another end.

(Sketch showing sequence and direction of welding)

11. Provision of run-on / run-off tabs : N.A

12. Cleaning of weld bead before laying of next weld bead :YES

13. Root preparation before welding other side of groove weld : N.A

14. Preheating and interpass temperature : N.A

15. Peening : N.A

16. Post weld treatment : N.A

17. Rectification of weld defect : By grinding of the defective weld and rectifying the weld as per A3 of IRS M-28-12 after conducting DP Test.

18. Inspection of weld : Visual, D.P Test.

19. Any other relevant detail : None

503

# WELDING PROCEDURE SPECIFICATION SHEET

Name of Work: REGARDING OF BR. NO:-83T SPAN (2X23.985) M BY RDSO STANDARD GIRDER OF SPAN 2X24.4M AT KM 81/3-4 IN BETWEEN SECTION BANGAON -PETRAPOL OVER (CHAMATI RIVER OF SEALDAH DIVISION)

Name & address of fabricator: VRINDA ENGINEERS PVT LTD
KANKORA, PANAGARH, BURDWAN 713148.

Welding Procedure Specification No: VEPL/PETRAPOL/24m/WPSS/08/R0

1. RDSO Drawing No. : RDSO/B-16016/R,Main Girder,End Stiffener
2. Weld joint description : 10 mm Fillet-Top & Bott Fl Plt. to End Stiffener. Plt. (28 mm & 28 mm)
3. Base Metal : IS 2062 – 11, Gr.E250 B0, Fully Killed & Fully Normalized.
4. Welding Process : GMAW
5. Welding Position : Horizontal/Vertical
6. Welding Consumable
   a. Electrode/Wire : Class: 1 of IRS M.46/13.
      Type: Copper coated mild steel wire
      Drying method: N.A
   b. Flux : ------.
   c. Shielding Gas : $CO_2$
7. Base metal preparation : Fusion faces and adjacent surfaces are cleaned and made free from cracks, notches, mill scale, grease, paint, rust etc., which may affect weld quality.

सहायक अनुसंधान अधिकारी (मा
Assistant Research Officer (M
रा.वि.सं. रेल मंत्रालय लखनऊ

13.3 Joint design details (Sketch showing arrangements of parts, weld groove details, weld passes & their sequence etc.) :

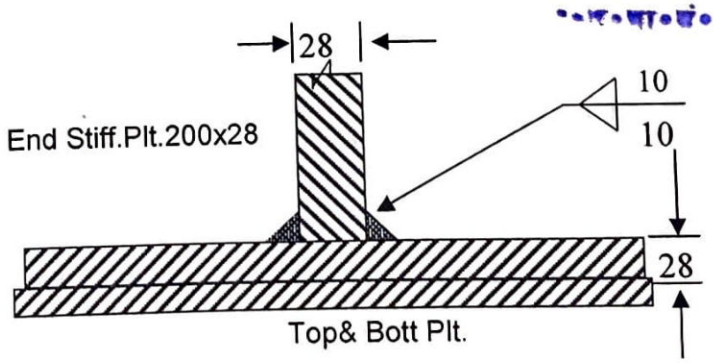


13.4 Joint preparation : As per IS 10178 Cl.8, IRS B1 – 2001, Cl. 17.3 & WBC – 2001.

8. Welding Current : Type : DC, Polarity : Reverse

502

9. Welder's Qualification : As per IS 7310 (Part I) – 1974

10. Welding parameters and technique :

16.1 Welding Parameters :

| Weld Pass | Electrode/ Wire dia. (mm) | Current (Amps) | Arc Voltage (volt) | Travel Speed (m/min) | Electrode Stickout (mm) | Gas flow (l/min) |
|---|---|---|---|---|---|---|
| 1 | 1.2 | 230-250 | 28-30 | 0.25 – 0.35 | 15 | 16-18 |
| 2 | 1.2 | 230-250 | 28-30 | 0.25 – 0.35 | 15 | 16-18 |
| 3 | 1.2 | 230-250 | 28-30 | 0.25 – 0.35 | 15 | 16-18 |

16.2 Welding sequence and technique : One end to another end.

(Sketch showing sequence and direction of welding)

11. Provision of run-on / run-off tabs : N.A

12. Cleaning of weld bead before laying of next weld bead :YES

13. Root preparation before welding other side of groove weld : N.A

14. Preheating and interpass temperature : N.A

15. Peening : N.A

16. Post weld treatment : N.A

17. Rectification of weld defect : By grinding of the defective weld and rectifying the weld as per A3 of IRS M-28-12 after conducting DP Test.

18. Inspection of weld : Visual, D.P Test.

19. Any other relevant detail : None

सहायक अनुसंधान अधिकारी (धातु
Assistant Research Officer (Me
उ०प०रा०सं० रेल मन्त्रालय लखनऊ

581

# WELDING PROCEDURE SPECIFICATION SHEET

Name of Work: REGARDING OF BR. NO:-83T SPAN (2X23.985) M BY RDSO STANDARD GIRDER OF SPAN 2X24.4M AT KM 81/3-4 IN BETWEEN SECTION BANGAON -PETRAPOL OVER (CHAMATI RIVER OF SEALDAH DIVISION)

Name & address of fabricator: VRINDA ENGINEERS PVT LTD
KANKORA, PANAGARH, BURDWAN 713148.

Welding Procedure Specification No: VEPL/PETRAPOL/24m/WPSS/09/R0

1. RDSO Drawing No. : RDSO/B-16016/R
2. Weld joint description : 5mm track weld on all Fillet Joint
   mm)
3. Base Metal : IS 2062 – 11, Gr. E250B0, Fully Killed & Fully Normalized.
4. Welding Process : GMAW
5. Welding Position : Horizontal/Vertical
6. Welding Consumable
   a. Electrode/Wire : Class: A3 of IRS M.46 with Amnd:1 of 2003
      Type: Copper coated mild steel wire
      Drying method: N.A
   b. Flux : ------.
   c. Shielding Gas : $CO_2$
7. Base metal preparation : Fusion faces and adjacent surfaces are cleaned and made free from cracks, notches, mill scale, grease, paint, rust etc., which may affect weld quality.
8. Joint design details : Length of Track weld -50mm:Gap between Track welds-300 mm
   a. Joint preparation : As per IS 9595- 1996, Cl3 & IRS B1- 2001 Cl. 17.3 &WBC-2001
9. Welding Current : Type : DC, Polarity : Reverse

सहायक अनुसंधान अधिकारी (धातु
Assistant Research Officer (Me
आर०डी०एस० रेल मन्त्रालय कोलकाता

580

10. Welder's Qualification : As per IS 7310 (Part I) – 1974

11. Welding parameters and technique :

11.1 Welding Parameters :

| Weld Pass | Electrode/ Wire dia. (mm) | Current (Amps) | Arc Voltage (volt) | Travel Speed (m/min) | Electrode Stick out (mm) | Gas flow (l/min) |
|---|---|---|---|---|---|---|
| 1 | 1.2 | 230-250 | 28-30 | 0.25 – 0.35 | 15 | 16-18 |

11.2 Welding sequence and technique : N.A

(Sketch showing sequence and direction of welding)

12 Provision of run-on / run-off tabs : N.A

13 Cleaning of weld bead before laying of next weld bead : N.A

14 Root preparation before welding other side of groove weld : N.A

15 Preheating and inter pass temperature: N.A

16 Peening : N.A

17 Post weld treatment : N.A

18. Rectification of weld defect : By rewelding after removal of defective weld portion.

19. Inspection of weld : Visual, D.P Test.

20. Any other relevant detail : None