DISCLAIMER

The details like name of project, name of fabricator , etc. are indicative only. These should never be referred for any WPSS related matters. Only the technical details should be referred and followed for the WPSS purpose.

Model WPSS for
Railway BOW STRING GIRDER
(with SV Loading and Congestion Factor)

Railway BOW STRING GIRDER
(with SV Loading and Congestion Factor)
60.0m clear span 2 lane
Model WPSS No: RDSO/Infra-II/B&S/ROB/BSG/ WPSS/60.0 series (21 Nos)

1

WELDING PROCEDURE SPECIFICATION SHEET FOR 60 m CLEAR SPAN BOW STRING GIRDER

R.O.B. 40A 2-LANE

Bridge Corporation Unit-Prayagraj

WELDING PROCEDURE SPECIFICATION SHEET FOR 60 m CLEAR SPAN BOW STRING GIRDER

Name and address of Fabricator		:	M/s. Bridge Track & Tower Pvt. Ltd., Plot No. 403 to 407 and 413 to 415, Sector-A, Urla Industrial Area Raipur – 492 003 (C.G.)
Welding Procedure specification No.		:	BTT/60/BS/01 Dated 22/08/2023
01.	Drawing No.	:	RDSO/B-10434
02.	Welding Joint Description.	:	Fillet 10 mm
03.	Base Metal.	:	IS: 2062 – 2011, Gr. : E350B0 , Fully Killed & Normalised
04.	Welding Process	:	S.A.W.
05.	Welding Position.	:	Flat
06.	Welding Consumable.		
6.1	Electrode/Wire Class Dia Type Drying Method	 : : : :	 W2 of IRS M 39-2020 4 mm Copper Coated Steel Wire. N.A.
6.2	Flux Class Type Drying Method	 : : :	 F2 OF IRS M 39 – 2020 Agglomerated. Recommended as per manufacturer.
6.3	Shielding Gas	:	NA
07.	Base Metal Preparation	:	Fusion Faces and adjacent surfaces are cleaned and made free from Cracks, Notches, Mill scale, Grease, Paint and Rust etc., which may affect weld quality.
7.1	Joint design Details	:	
	(Sketch showing arrangements of parts, weld bead details, weld passes & their sequence etc.) (Web with flange)		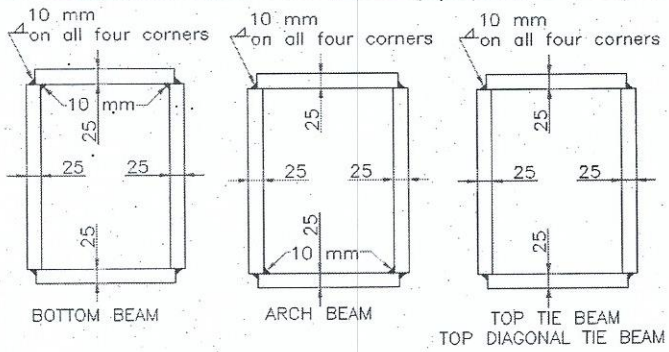 Ref- Section 1-1, Section 3-3,Section 6-6 & Section 7-7 of Drg No. 10434/1
7.2	Joint preparation	:	As Per IS: 4353 – 1995, IS: 7215 & Welded Bridge Code.
08.	Welding Current	:	
	Type	:	DC
	Polarity	:	Reverse
09.	Welder qualification	:	As per IS: 7310/7307 (Part-I) – ~~1974~~ 2019
10.	Welding Parameters and technique	:	
10.1	Welding Parameters	:	

सं०अ० अधि० / धातु एवं रसा०
Asstt. Research Officer/M&C
रेल मंत्रालय / Ministry of Railways
आ०अ०मा०सं०, लखनऊ / R.D.S.O., Lucknow
RDSO

WELDING PROCEDURE SPECIFICATION SHEET FOR 60 m CLEAR SPAN BOW STRING GIRDER

Weld Sequence No.	Electrodes wire dia. (mm)	Current (Amps)	Arc Voltage (Volt)	Wire Feed Speed (m/min)	Travel Speed (m/min)	Electrical Stick out (mm)	Gas Flow (I/min.)
1	4	460 – 550	28– 32	2.0 – 2.5	0.30 – 0.50	15 – 20	N.A.
2	4	460 – 550	28– 32	2.0 – 2.5	0.30 – 0.50	15 – 20	N.A.
3	4	460 – 550	28– 32	2.0 – 2.5	0.30 – 0.50	15 – 20	N.A.
4	4	460 – 550	28– 32	2.0 – 2.5	0.30 – 0.50	15 – 20	N.A.
5	4	460 – 550	28– 32	2.0 – 2.5	0.30 – 0.50	15 – 20	N.A.
6	4	460 – 550	28– 32	2.0 – 2.5	0.30 – 0.50	15 – 20	N.A.

10.2	Welding Sequence and technique	:	N.A.

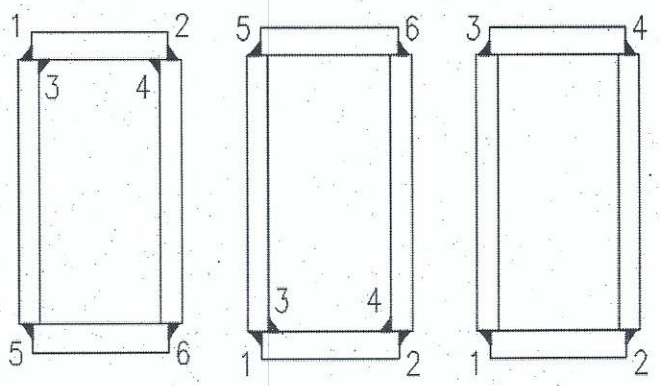

11.	Provision of run-on / run-off tabs	:	Yes
12.	Cleaning of weld bead before laying next weld bead	:	By brush cleaning and grinding
13.	Root preparation before welding other side of groove weld	:	N.A.
14.	Preheating and inter pass temperature	:	120-160°C , 150-250°c
15.	Peening	:	N.A.
16.	Post Weld treatment	:	N.A.
17.	Rectification of weld defect	:	By re-welding after complete removal of defective weld& rectify the weld as per Cl.32.2 of IS 9595-96, using FCAW(Class I of IRS M 46)after rectification DP will be conducted.
18.	Inspection of Weld	:	Visual, D.P. &Macro etching Test.
19.	Any other relevant Details	:	BOTTOMBEAM, ARCH BEAM TOP TIE BEAM & TOP DIAGONAL TIE BEAM.

सo अo अधि० / धातु एवं रेसी०
Asstt. Research Officer/M&C
रेल मंत्रालय / Ministry of Railways
RDSO
अ०अ०मा०सं०, लखनऊ / R.D.S.O., Lucknow

WELDING PROCEDURE SPECIFICATION SHEET FOR 60 m CLEAR SPAN BOW STRING GIRDER

Name and address of Fabricator		:	M/s. Bridge Track & Tower Pvt. Ltd., Plot No. 403 to 407 and 413 to 415, Sector-A, Urla Industrial Area Raipur – 492 003 (C.G.)
Welding Procedure specification No.		:	BTT/60/BS/02Dated 22/08/2023
01.	Drawing No.	:	RDSO/B-10434
02.	Welding Joint Description.	:	Fillet 10 mm
03.	Base Metal.	:	IS: 2062 – 2011, Gr. : E350 B0
04.	Welding Process	:	S.A.W.
05.	Welding Position.	:	Flat
06.	Welding Consumable.		
6.1	Electrode/Wire Class Dia Type Drying Method	 : : : :	 W2 of IRS M 39-~~2001.~~ 2020 4 mm Copper Coated Steel Wire. N.A.
6.2	Flux Class Type Drying Method	 : : :	 F2 OF IRS M 39 – ~~2001~~ 2020 Agglomerated. Recommended as per manufacturer.
6.3	Shielding Gas	:	NA
07.	Base Metal Preparation	:	Fusion Faces and adjacent surfaces are cleaned and made free from Cracks, Notches, Mill scale, Grease, Paint and Rust etc., which may affect weld quality.
7.1	Joint design Details	:	
	(Sketch showing arrangements of parts, weld bead details, weld passes & their sequence etc.) (Web with flange)		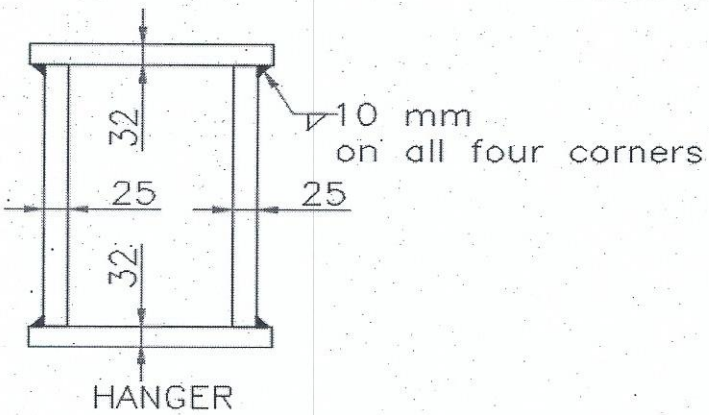 Ref- Section 2-2 - of Drg No. 10434/1
7.2	Joint preparation	:	As Per IS: 4353 – 1995, IS: 7215 & Welded Bridge Code.
08.	Welding Current	:	
	Type	:	DC
	Polarity	:	Reverse
09.	Welder qualification	:	As per IS: 7310/7307 (Part-I) – ~~1974~~ 2019
10.	Welding Parameters and technique	:	
10.1	Welding Parameters	:	

सहा० अधि० / धातु एवं रसा०
Asstt. Research Officer/M&C
रेल मंत्रालय / Ministry of Railways
आ०मा०सं०, लखनऊ / R.D.S.O., Lucknow

RDSO

WELDING PROCEDURE SPECIFICATION SHEET FOR 60 m CLEAR SPAN BOW STRING GIRDER

Weld Sequence No.	Electrodes wire dia. (mm)	Current (Amps)	Arc Voltage (Volt)	Wire Feed Speed (m/min)	Travel Speed (m/min)	Electrical Stick out (mm)	Gas Flow (I/min.)
1	4	460 – 550	28– 32	2.0 – 2.5	0.30 – 0.50	15 – 20	N.A.
2	4	460 – 550	28– 32	2.0 – 2.5	0.30 – 0.50	15 – 20	N.A.
3	4	460 – 550	28– 32	2.0 – 2.5	0.30 – 0.50	15 – 20	N.A.
4	4	460 – 550	28– 32	2.0 – 2.5	0.30 – 0.50	15 – 20	N.A.

10.2	Welding Sequence and technique	:	N.A.
			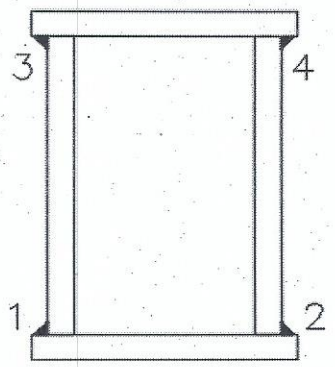

11.	Provision of run-on / run-off tabs	:	Yes
12.	Cleaning of weld bead before laying next weld bead	:	By brush cleaning and grinding
13.	Root preparation before welding other side of groove weld	:	N.A.
14.	Preheating and inter pass temperature	:	120-160°C , 150-250°C
15.	Peening	:	N.A.
16.	Post Weld treatment	:	N.A.
17.	Rectification of weld defect	:	By re-welding after complete removal of defective weld& rectify the weld as per Cl.32.2 of IS 9595-96, using FCAW(Class I of IRS M 46) after rectification DP will be conducted.
18.	Inspection of Weld	:	Visual, D.P.&Macro etching Test.
19.	Any other relevant Details	:	HANGER BEAM

सo अo अधि० / धातु एवं रसा०
Asstt. Research Officer/M&C
रेल मंत्रालय / Ministry of Railways
अo अo मा० एवं लखनऊ / R.D.S.O., Lucknow

WELDING PROCEDURE SPECIFICATION SHEET FOR 60 m CLEAR SPAN BOW STRING GIRDER

Name and address of Fabricator		:	M/s. Bridge Track & Tower Pvt. Ltd., Plot No. 403 to 407 and 413 to 415, Sector-A, Urla Industrial Area Raipur – 492 003 (C.G.)
Welding Procedure specification No.		:	BTT/60/BS/03Dated 22/08/2023
01.	Drawing No.	:	RDSO/B-10434
02.	Welding Joint Description.	:	Fillet 14 mm
03.	Base Metal.	:	IS: 2062 – 2011, Gr. : E350 B0
04.	Welding Process	:	S.A.W.
05.	Welding Position.	:	Flat
06.	Welding Consumable.		
6.1	Electrode/Wire Class Dia Type Drying Method	 : : : :	 W2 of IRS M 39-~~2001.~~ 2020 4 mm Copper Coated Steel Wire. N.A.
6.2	Flux Class Type Drying Method	 : : :	 F2 OF IRS M 39 – ~~2001~~ 2020 Agglomerated. Recommended as per manufacturer.
6.3	Shielding Gas	:	NA
07.	Base Metal Preparation	:	Fusion Faces and adjacent surfaces are cleaned and made free from Cracks, Notches, Mill scale, Grease, Paint and Rust etc., which may affect weld quality.
	Joint design Details	:	
7.1	(Sketch showing arrangements of parts, weld bead details, weld passes & their sequence etc.) (Web with flange)		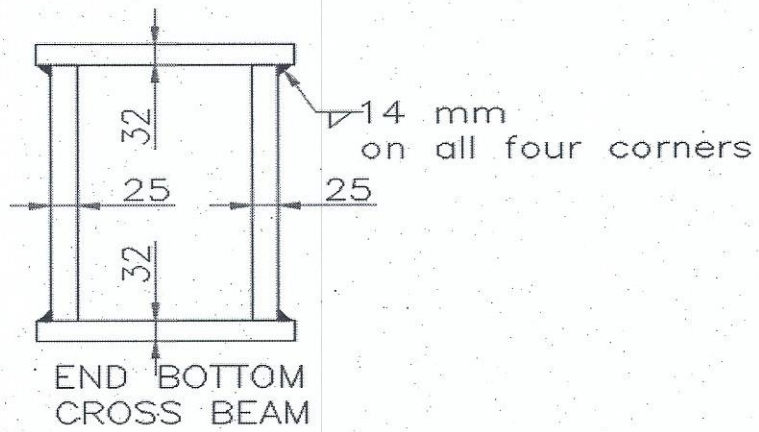 Ref- Section 5-5 of Drg No. 10434/1
7.2	Joint preparation	:	As Per IS: 4353 – 1995, IS: 7215 & Welded Bridge Code.
08.	Welding Current	:	
	Type	:	DC
	Polarity	:	Reverse
09.	Welder qualification	:	As per IS: 7310/7307 (Part-I) – ~~1974~~ 2019
10.	Welding Parameters and technique	:	
10.1	Welding Parameters	:	

सo अo अधि० / धातु एवं रसा०
Asstt. Research Officer/M&C
रेल मंत्रालय / Ministry of Railways
अo अ० सं० लखनऊ / R.D.S O., Lucknow
RDSO

WELDING PROCEDURE SPECIFICATION SHEET FOR 60 m CLEAR SPAN BOW STRING GIRDER

Weld Sequence No.	Electrodes wire dia. (mm)	Current (Amps)	Arc Voltage (Volt)	Wire Feed Speed (m/min)	Travel Speed (m/min)	Electrical Stick out (mm)	Gas Flow (I/min.)
1	4	460 – 550	28– 32	2.0 – 2.5	0.30 – 0.50	15 – 20	N.A.
2	4	460 – 550	28– 32	2.0 – 2.5	0.30 – 0.50	15 – 20	N.A.
3	4	460 – 550	28– 32	2.0 – 2.5	0.30 – 0.50	15 – 20	N.A.
4	4	460 – 550	28– 32	2.0 – 2.5	0.30 – 0.50	15 – 20	N.A.
5	4	460 – 550	28– 32	2.0 – 2.5	0.30 – 0.50	15 – 20	N.A.
6	4	460 – 550	28– 32	2.0 – 2.5	0.30 – 0.50	15 – 20	N.A.
7	4	460 – 550	28– 32	2.0 – 2.5	0.30 – 0.50	15 – 20	N.A.
8	4	460 – 550	28– 32	2.0 – 2.5	0.30 – 0.50	15 – 20	N.A.

10.2	Welding Sequence and technique	:	N.A.

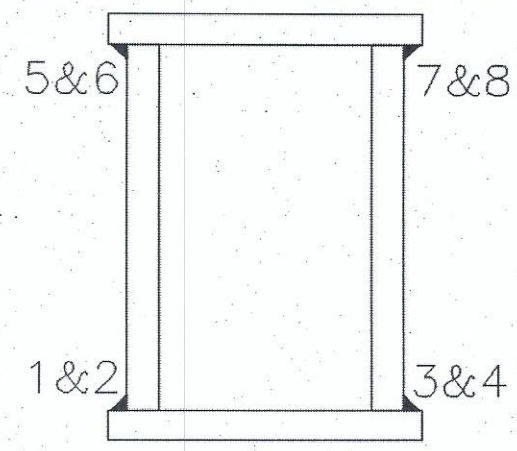

11.	Provision of run-on / run-off tabs	:	Yes
12.	Cleaning of weld bead before laying next weld bead	:	By brush cleaning and grinding
13.	Root preparation before welding other side of groove weld	:	N.A.
14.	Preheating and inter pass temperature	:	120-160°C , 150-250°C
15.	Peening	:	N.A.
16.	Post Weld treatment	:	N.A.
17.	Rectification of weld defect	:	By re-welding after complete removal of defective weld& rectify the weld as per Cl.32.2 of IS 9595-96, using FCAW(Class I of IRS M 46) after rectification DP will be conducted.
18.	Inspection of Weld	:	Visual, D.P. &Macro etching Test.
19.	Any other relevant Details	:	END CROSS GIRDER

WELDING PROCEDURE SPECIFICATION SHEET FOR 60 m CLEAR SPAN BOW STRING GIRDER

Name and address of Fabricator		:	M/s. Bridge Track & Tower Pvt. Ltd., Plot No. 403 to 407 and 413 to 415, Sector-A, Urla Industrial Area Raipur – 492 003 (C.G.)
Welding Procedure specification No.		:	BTT/60/BS/04Dated 22/08/2023
01.	Drawing No.	:	RDSO/B-10434
02.	Welding Joint Description.	:	Fillet 12 mm
03.	Base Metal.	:	IS: 2062 – 2011, Gr. : E350 B0
04.	Welding Process	:	S.A.W.
05.	Welding Position.	:	Flat
06.	Welding Consumable.		
6.1	Electrode/Wire Class Dia Type Drying Method	 : : : :	 W2 of IRS M 39-~~2001~~. 2020 4 mm Copper Coated Steel Wire. N.A.
6.2	Flux Class Type Drying Method	 : : :	 F2 OF IRS M 39 – ~~2001~~ 2020 Agglomerated. Recommended as per manufacturer.
6.3	Shielding Gas	:	NA
07.	Base Metal Preparation	:	Fusion Faces and adjacent surfaces are cleaned and made free from Cracks, Notches, Mill scale, Grease, Paint and Rust etc., which may affect weld quality.
7.1	Joint design Details	:	
	(Sketch showing arrangements of parts, weld bead details, weld passes & their sequence etc.) Web with Flange		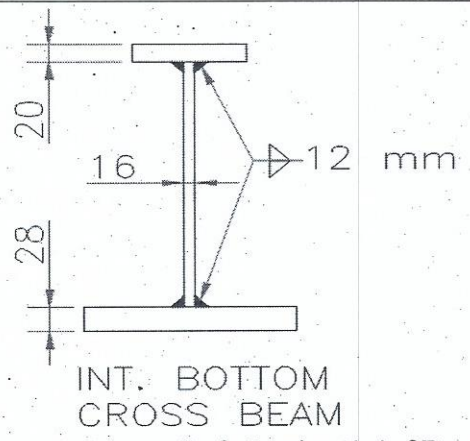 Ref- Section 4-4of Drg No. 10434/1
7.2	Joint preparation	:	As Per IS: 4353 – 1995, IS: 7215 & Welded Bridge Code.
08.	Welding Current	:	
	Type	:	DC
	Polarity	:	Reverse
09.	Welder qualification	:	As per IS: 7310/7307 (Part-I) – ~~1974~~ 2019
10.	Welding Parameters and technique	:	
10.1	Welding Parameters	:	

सं०अ० अधि० / धातु एवं रसा०
Asstt. Research Officer/M&C
रेल मंत्रालय / Ministry of Railways
अ०अ०मा०सं०, लखनऊ / R.D.S.O., Lucknow

RDSO

WELDING PROCEDURE SPECIFICATION SHEET FOR 60 m CLEAR SPAN BOW STRING GIRDER

Weld Sequence No.	Electrodes wire dia. (mm)	Current (Amps)	Arc Voltage (Volt)	Wire Feed Speed (m/min)	Travel Speed (m/min)	Electrical Stick out (mm)	Gas Flow (I/min.)
1	4	460 – 550	28– 32	2.0 – 2.5	0.32 – 0.50	15 – 20	N.A.
2	4	460 – 550	28– 32	2.0 – 2.5	0.32 – 0.50	15 – 20	N.A.
3	4	460 – 550	28– 32	2.0 – 2.5	0.32 – 0.50	15 – 20	N.A.
4	4	460 – 550	28– 32	2.0 – 2.5	0.32 – 0.50	15 – 20	N.A.

10.2	Welding Sequence and technique	:	N.A.

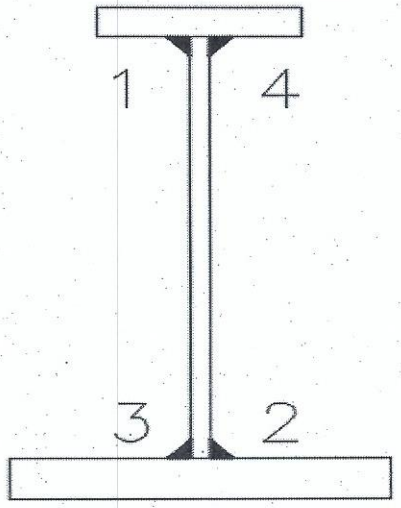

11.	Provision of run-on / run-off tabs	:	Yes
12.	Cleaning of weld bead before laying next weld bead	:	By brush cleaning and grinding
13.	Root preparation before welding other side of groove weld	:	N.A.
14.	Preheating and inter pass temperature	:	120° C - 160°C , 150-250°C
15.	Peening	:	N.A.
16.	Post Weld treatment	:	N.A.
17.	Rectification of weld defect	:	By re-welding after complete removal of defective weld& rectify the weld as per Cl.32.2 of IS 9595-96, using FCAW(Class I of IRS M 46) after rectification DP will be conducted.
18.	Inspection of Weld	:	Visual, D.P.&Macro etching Test.
19.	Any other relevant Details	:	INTERMEDIATE BOTTOM CROSSGIRDER

सहा० अधि० / धातु एवं रसा०
Asstt. Research Officer/M&C
रेल मंत्रालय / Ministry of Railways
अ०अ०मा०सं०, लखनऊ / R.D.S.O., Lucknow

WELDING PROCEDURE SPECIFICATION SHEET FOR 60 m CLEAR SPAN BOW STRING GIRDER

Name and address of Fabricator		:	M/s. Bridge Track & Tower Pvt. Ltd., Plot No. 403 to 407 and 413 to 415, Sector-A, Urla Industrial Area Raipur – 492 003 (C.G.)
Welding Procedure specification No.		:	BTT/60/BS/05Dated 22/08/2023
01.	Drawing No.	:	RDSO/B-10434
02.	Welding Joint Description.	:	Fillet 10 mm
03.	Base Metal.	:	IS: 2062 – 2011, Gr. : E350 B0
04.	Welding Process	:	F.C.A.W.
05.	Welding Position.	:	Horizontal
06.	Welding Consumable.		
6.1	Electrode/Wire Class Dia Type Drying Method	 : : : :	 I of IRS M 46-2013 1.2 mm Flux Cored Filler Wire. N.A.
6.2	Flux Class Type Drying Method	 : : :	 N.A. N.A. N.A.
6.3	Shielding Gas	:	CO_2
07.	Base Metal Preparation	:	Fusion Faces and adjacent surfaces are cleaned and made free from Cracks, Notches, Mill scale, Grease, Paint and Rust etc., which may affect weld quality.
7.1	Joint design Details	:	
	(Sketch showing arrangements of parts, weld bead details, weld passes & their sequence etc.) Diaphragm plate of all box components. Diaphragm plate to be welded at least 3side using 10mm weld, compulsory on hanger side .		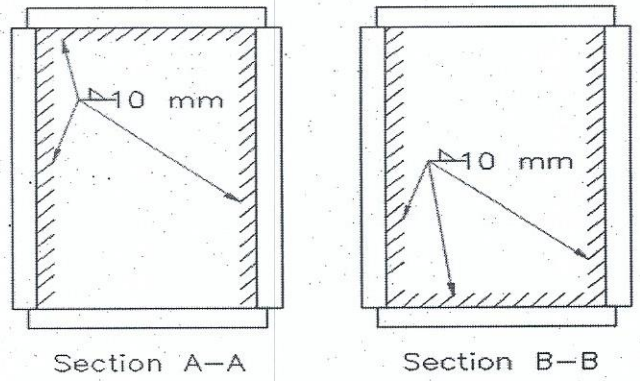 Section: A-A REF. DRG. No. RDSO/B-10434/5 Section: B-B REF. DRG. No. RDSO/B-10434/2
7.2	Joint preparation	:	As Per IS: 4353 – 1995, IS: 7215 & Welded Bridge Code.
08.	Welding Current	:	
	Type	:	DC
	Polarity	:	Reverse
09.	Welder qualification	:	As per IS: 7310/7307 (Part-I) – 1974
10.	Welding Parameters and technique	:	
10.1	Welding Parameters	:	

सo अo अधिo / धातु एवं रसाo
Asstt. Research Officer/M&C
रेल मंत्रालय / Ministry of Railways
अo अo मा o सं o, लखनऊ / R.D.S O., Lucknow

RDSO

WELDING PROCEDURE SPECIFICATION SHEET FOR 60 m CLEAR SPAN BOW STRING GIRDER

Weld Pass No.	Electrodes wire dia. (mm)	Current (Amps)	Arc Voltage (Volt)	Wire Feed Speed (m/min)	Travel Speed (m/min)	Electrical Stick out (mm)	Gas Flow (I/min.)
1	1.2	150 – 240	24 – 30	4.0 – 6.0	N.A.	13 - 18	13 – 18
2	1.2	150 – 240	24 – 30	4.0 – 6.0	N.A.	13 - 18	13 – 18
3	1.2	150 – 240	24 – 30	4.0 – 6.0	N.A.	13 - 18	13 – 18

10.2	Welding Sequence and technique	:	N.A.
Amp & Voltage should be decreased 10-20% in welding of Vertical position.			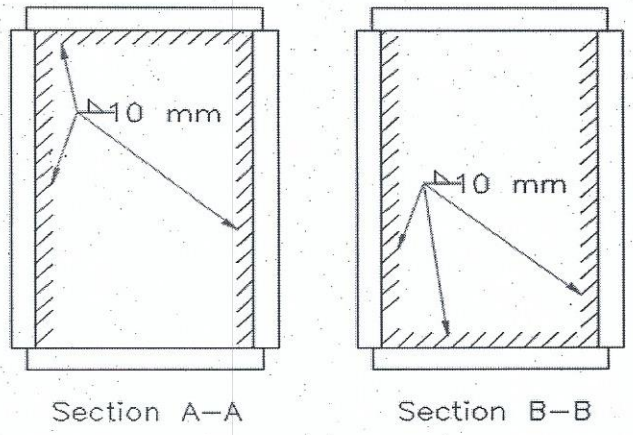

11.	Provision of run-on / run-off tabs	:	N.A.
12.	Cleaning of weld bead before laying next weld bead	:	By brush cleaning and grinding
13.	Root preparation before welding other side of groove weld	:	N.A.
14.	Preheating and inter pass temperature	:	110° C - 160°C
15.	Peening	:	N.A.
16.	Post Weld treatment	:	N.A.
17.	Rectification of weld defect	:	By re-welding after complete removal of defective weld& rectify the weld as per Cl.32.2 of IS 9595-96, using FCAW(Class I of IRS M 46) after rectification DP will be conducted.
18.	Inspection of Weld	:	Visual, D.P. Test.
19.	Any other relevant Details	:	DIAPHRAGM PLATES OF ALL BOX.

सं०अ० अधि० / धातु एवं रसा०
Asstt. Research Officer/M&C
रेल मंत्रालय / Ministry of Railways
आ०अ०मा०सं०, लखनऊ / R.D.S.O., Lucknow

WELDING PROCEDURE SPECIFICATION SHEET FOR 60 m CLEAR SPAN BOW STRING GIRDER

Name and address of Fabricator		:	M/s. Bridge Track & Tower Pvt. Ltd., Plot No. 403 to 407 and 413 to 415, Sector-A, Urla Industrial Area Raipur – 492 003 (C.G.)
Welding Procedure specification No.		:	BTT/60/BS/06Dated 22/08/2023
01.	Drawing No.	:	RDSO/B-10434
02.	Welding Joint Description.	:	Fillet 12 mm
03.	Base Metal.	:	IS: 2062 – 2011, Gr. : E350 B0
04.	Welding Process	:	F.C.A.W.
05.	Welding Position.	:	Horizontal
06.	Welding Consumable.		
6.1	Electrode/Wire Class Dia Type Drying Method	 : : : :	 I of IRS M 46-2013 1.2 mm Flux Cored Filler Wire. N.A.
6.2	Flux Class Type Drying Method	 : : :	 N.A. N.A. N.A.
6.3	Shielding Gas	:	CO_2
07.	Base Metal Preparation	:	Fusion Faces and adjacent surfaces are cleaned and made free from Cracks, Notches, Mill scale, Grease, Paint and Rust etc., which may affect weld quality.
	Joint design Details	:	
7.1	(Sketch showing arrangements of parts, weld bead details, weld passes & their sequence etc.) Cleat with end & Int. Cross Girder		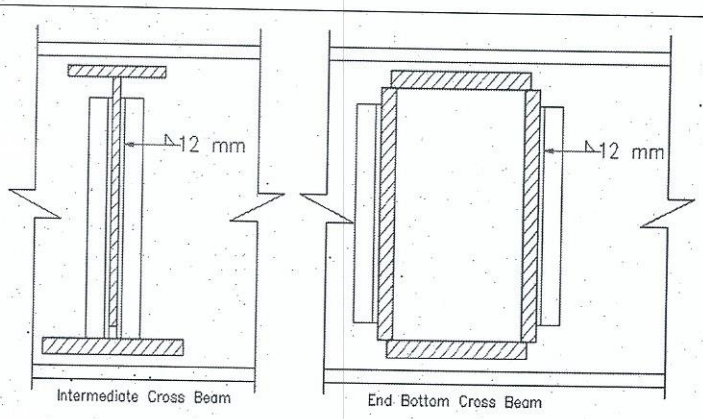 Connection Detail REF. DRG. No. RDSO/B-10434/6 Section: G-G REF. DRG. No. RDSO/B-10434/6
7.2	Joint preparation	:	As Per IS: 4353 – 1995, IS: 7215 & Welded Bridge Code.
08.	Welding Current	:	
	Type	:	DC
	Polarity	:	Reverse
09.	Welder qualification	:	As per IS: 7310/7307 (Part-I) – 1974
10.	Welding Parameters and technique	:	
10.1	Welding Parameters	:	

सहा० अधि० / धातु एवं रसा०
Asstt. Research Officer/M&C
रेल मंत्रालय / Ministry of Railways
आर०डी०एस०ओ०, लखनऊ / R.D.S.O., Lucknow

WELDING PROCEDURE SPECIFICATION SHEET FOR 60 m CLEAR SPAN BOW STRING GIRDER

Weld Pass No.	Electrodes wire dia. (mm)	Current (Amps)	Arc Voltage (Volt)	Wire Feed Speed (m/min)	Travel Speed (m/min)	Electrical Stick out (mm)	Gas Flow (I/min.)
1	1.2	150 – 240	24 – 30	4.0 – 6.0	N.A.	13 - 18	13 – 18
2	1.2	150 – 240	24 – 30	4.0 – 6.0	N.A.	13 - 18	13 – 18
3	1.2	150 – 240	24 – 30	4.0 – 6.0	N.A.	13 - 18	13 – 18

10.2	Welding Sequence and technique	:	N.A.
Amp & Voltage should be decreased 10-20% in welding of Vertical position.			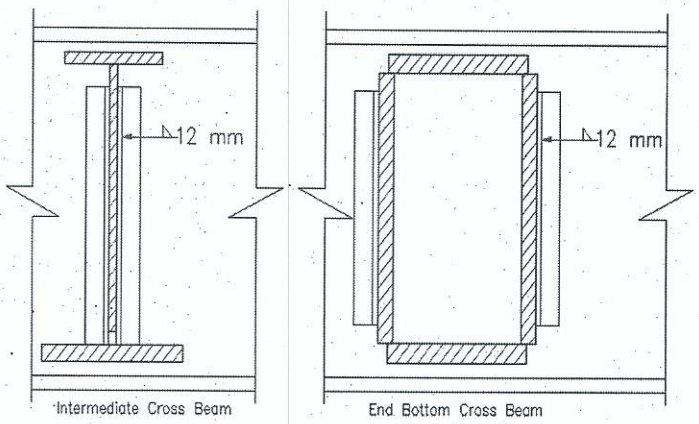

11.	Provision of run-on / run-off tabs	:	N.A.
12.	Cleaning of weld bead before laying next weld bead	:	By brush cleaning and grinding
13.	Root preparation before welding other side of groove weld	:	N.A.
14.	Preheating and inter pass temperature	:	110° C - 160°C
15.	Peening	:	N.A.
16.	Post Weld treatment	:	N.A.
17.	Rectification of weld defect	:	By re-welding after complete removal of defective weld& rectify the weld as per Cl.32.2 of IS 9595-96, using FCAW(Class I of IRS M 46) after rectification DP will be conducted.
18.	Inspection of Weld	:	Visual, D.P. Test.
19.	Any other relevant Details	:	CLEATS 100x10x12 with END & INT. BOTTOM CROSS GIRDER

स०अ० अधि० / धातु एवं रसा०
Asstt. Research Officer/M&C
रेल मंत्रालय / Ministry of Railways
अ०अ०मा०सं०, लखनऊ / R.D.S.O., Lucknow

WELDING PROCEDURE SPECIFICATION SHEET FOR 60 m CLEAR SPAN BOW STRING GIRDER

Name and address of Fabricator		:	M/s. Bridge Track & Tower Pvt. Ltd., Plot No. 403 to 407 and 413 to 415, Sector-A, Urla Industrial Area Raipur – 492 003 (C.G.)
Welding Procedure specification No.		:	BTT/60/BS/07Dated 22/08/2023
01.	Drawing No.	:	RDSO/B-10434
02.	Welding Joint Description.	:	Fillet 5 mm Tack Weld
03.	Base Metal.	:	IS: 2062 – 2011 E350/E250
04.	Welding Process	:	FCAW
05.	Welding Position.	:	Horizontal / Vertical
06.	Welding Consumable.		
6.1	Electrode/Wire		
	Class	:	I of IRS M 46 – 2020
	Type	:	FCAW.
	Drying temperature	:	N.A.
6.2	Flux		
	Class	:	N.A.
	Type	:	N.A.
	Drying temperature	:	N.A.
6.3	Shielding Gas	:	CO_2
07.	Base Metal Preparation	:	Fusion Faces and adjacent surfaces are cleaned and made free from Cracks, Notches, Mill scale, Grease, Paint, Rust etc., which may affected weld quality.
7.1	Joint design Details	:	
7.2	Joint preparation	:	As Per IS: 4353 – 1995, IS: 7215 & Welded Bridge Code.
08.	Welding Current	:	
	Type	:	DC
	Polarity	:	Reverse
09.	Welder qualification	:	As per IS: 7310 /7307 (Part-I) – ~~1974~~ 2010
10.	Welding Parameters and technique	:	
10.1.	Welding Parameters	:	

सo अo अधि० / धातु एवं रसा०
Asstt. Research Officer/M&C
रेल मंत्रालय / Ministry of Railways
अ०अ०मा०सं०, लखनऊ / R.D.S O., Lucknow
RDSO

WELDING PROCEDURE SPECIFICATION SHEET FOR 60 m CLEAR SPAN BOW STRING GIRDER

Weld Pass No.	Electrodes wire dia. (mm)	Current (Amps)	Arc Voltage (Volt)	Wire Feed Speed (m/min)	Travel Speed (m/min)	Electrical Stick out (mm)	Gas Flow (I/min.)
1	1.2	190 – 220	24–26	3.5 – 4.0	N.A.	13 – 16	16 - 18

10.2	Welding Sequence and technique	:	
Length of Tack Weld 50 mm Distance between tack Weld 300 mm			N.A.

11.	Provision of run-on / run-off tabs	:	N.A.
12.	Cleaning of weld bead before laying next weld bead	:	By brush cleaning and grinding
13.	Root preparation before welding other side of groove weld	:	N.A.
14.	Preheating and inter pass temperature	:	110° C - 160°C
15.	Peening	:	N.A.
16.	Post Weld treatment	:	N.A.
17.	Rectification of weld defect	:	By re-welding after complete removal of defective weld& rectify the weld as per Cl.32.2 of IS 9595-96, using FCAW(Class I of IRS M 46) after rectification DP will be conducted.
18.	Inspection of Weld	:	Visual & DPT
19.	Any other relevant Details	:	Tack Weld of all fit up component

सं०अ० अधि० / धातु एवं रसा०
Asstt. Research Officer/M&C
रेल मंत्रालय / Ministry of Railways.
आ०अ०मा०सं०, लखनऊ / R.D.S.O., Lucknow

WELDING PROCEDURE SPECIFICATION SHEET FOR 60 m CLEAR SPAN BOW STRING GIRDER

Name and address of Fabricator		:	M/s. Bridge Track & Tower Pvt. Ltd., Plot No. 403 to 407 and 413 to 415, Sector-A, Urla Industrial Area Raipur – 492 003 (C.G.)
Welding Procedure specification No.		:	BTT/60/BS/08Dated 22/08/2023
01.	Drawing No.	:	RDSO/B-10434
02.	Welding Joint Description.	:	Stud Welding
03.	Base Metal.	:	IS: 2062 – 2011, Gr. : E250 B0, E350 B0 & SD1 of ISO 13918
04.	Welding Process	:	Arc Stud Welding with Ceramic ferrule technique
05.	Welding Position.	:	Straight
06.	Welding Consumable.		
6.1	Electrode/Wire Class Dia Type Drying Method	 : : : :	 N.A. N.A. N.A. N.A.
6.2	Flux Class Type Drying Method	 : : :	 N.A. N.A. N.A.
6.3	Shielding Gas	:	N.A.
07.	Base Metal Preparation	:	Stud to be cut, straight, square & fitted with Aluminum & surrounding area of weld to be free from scale, dirt, grease, paint etc.
7.1	Joint design Details (Sketch showing arrangements of parts, weld bead details, weld passes & their sequence etc.) Stud with Top flange of cross girder	:	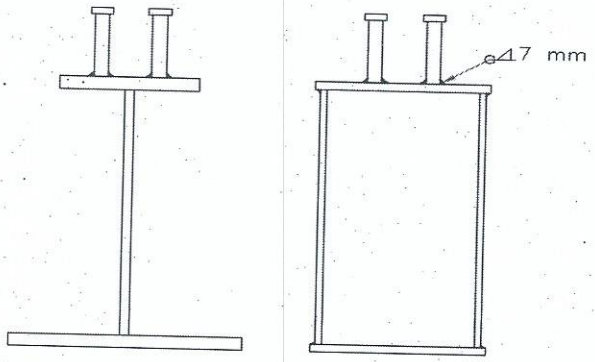 Ref Drg No. 10434/6 Section B1-B1 Section E-E
7.2	Joint preparation	:	As Per IS: 4353 – 1995, IS: 7215 & Welded Bridge Code.
08.	Welding Current	:	
	Type	:	DC
	Polarity	:	Straight polarity
09.	Welder qualification	:	As per IS: 7310 /7307 (Part-I) – 1974
10.	Welding Parameters and technique	:	
10.1	Welding Parameters	:	

स०अ० अधि० / धातु एवं रसा०
Asstt. Research Officer/M&C
रेल मंत्रालय / Ministry of Railways
अ०अ०मा०सं०, लखनऊ / R.D.S.O., Lucknow

WELDING PROCEDURE SPECIFICATION SHEET FOR 60 m CLEAR SPAN BOW STRING GIRDER

Weld Sequence No.	Electrodes wire dia. (mm)	Current (Amps)	Arc Voltage (Volt)	Time	Lift	Plunge
1	N.A.	Up to 2500 Amp.	45- 60 OCV	1 to 3	3 to 5	0.250

10.2	Welding Sequence and technique	:	N.A.

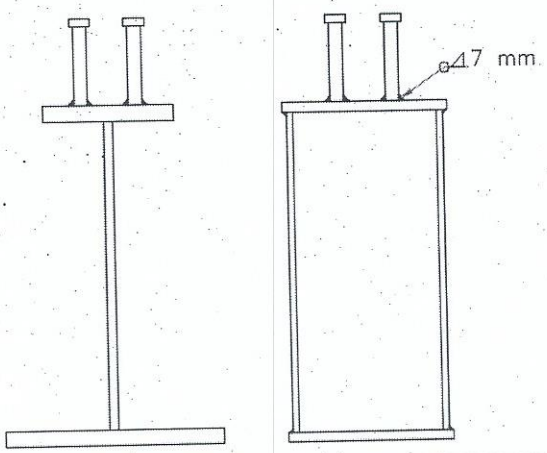

11.	Provision of run-on / run-off tabs	:	N.A.
12.	Cleaning of weld bead before laying next weld bead	:	By grinding and wire brush
13.	Root preparation before welding other side of groove weld	:	N.A.
14.	Preheating and inter pass temperature	:	121° c for ceramic ferrule before use.
15.	Peening	:	N.A.
16.	Post Weld treatment	:	N.A.
17.	Rectification of weld defect	:	Remove of defective stud & new stud weld after proper grinding of surface (May be use FCAW weld for minor defect)
18.	Inspection of Weld	:	Ringing & bent test using 2kg & 6 kg Hammer (2%)
19.	Any other relevant Details	:	STUD WELDING AT TOP FLANGE OF CROSS BEAM

सo अo अधिo / धातु एवं रस
Asstt. Research Officer/M&
रेल मंत्रालय / Ministry of Railwa
अo अo मा o सं o, लखनऊ / R.D.S.O., Lu

RDSO

WELDING PROCEDURE SPECIFICATION SHEET FOR 60 m CLEAR SPAN BOW STRING GIRDER

Name and address of Fabricator		:	M/s. Bridge Track & Tower Pvt. Ltd., Plot No. 403 to 407 and 413 to 415, Sector-A, Urla Industrial Area Raipur – 492 003 (C.G.)
Welding Procedure specification No.		:	BTT/60/BS/09Dated 22/08/2023
01.	Drawing No.	:	RDSO/B-10434
02.	Welding Joint Description.	:	Fillet 22 mm
03.	Base Metal.	:	IS: 2062 – 2011, Gr. : E350 B0
04.	Welding Process	:	F.C.A.W. (Flux core Arc Welding)
05.	Welding Position.	:	Horizontal /Vertical/ Overhead
06.	Welding Consumable.		
6.1	Electrode/Wire Class Dia Type Drying Method	 : : : :	 I of IRS M 46-2015 1.2 mm Flux Cored Filler Wire. N.A.
6.2	Flux Class Type Drying Method	 : : :	 N.A. N.A. N.A.
6.3	Shielding Gas	:	CO_2
07.	Base Metal Preparation	:	Fusion Faces and adjacent surfaces are cleaned and made free from Cracks, Notches, Mill scale, Grease, Paint and Rust etc., which may affect weld quality.
7.1	Joint design Details	:	
	(Sketch showing arrangements of parts, weld bead details, weld passes & their sequence etc.) Splice cover plate with Side Plate of bottom beam & Splice cover plate with side Plate of arch beam		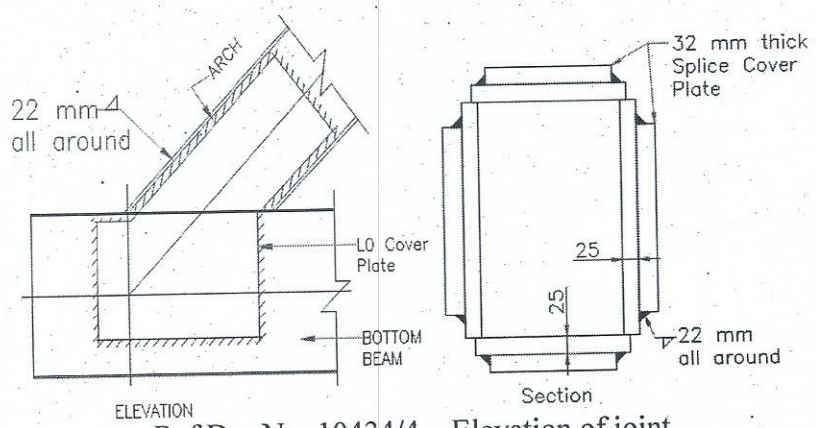 Ref Drg No. 10434/4 Elevation of joint
7.2	Joint preparation	:	As Per IS: 4353 – 1995, IS: 7215 & Welded Bridge Code.
08.	Welding Current	:	
	Type	:	DC
	Polarity	:	Reverse.
09.	Welder qualification	:	As per IS: 7310/7307 (Part-I) – ~~1974~~ 2019
10.	Welding Parameters and technique	:	
10.1	Welding Parameters	:	

सहा० अधि० / धातु एवं रसा०
Asstt. Research Officer/M&C
रेल मंत्रालय / Ministry of Railways
अ०अ०मा०सं०, लखनऊ / R.D.S.O., Lucknow

RDSO

WELDING PROCEDURE SPECIFICATION SHEET FOR 60 m CLEAR SPAN BOW STRING GIRDER

Weld Pass No.	Electrodes wire dia. (mm)	Current (Amps)	Arc Voltage (Volt)	Wire Feed Speed (m/min)	Travel Speed (m/min)	Electrical Stick out (mm)	Gas Flow (I/min.)
1	1.2	150 – 240	24 – 30	4.0 – 6.0	N.A.	13 - 18	13 – 18
2	1.2	150 – 240	24 – 30	4.0 – 6.0	N.A.	13 - 18	13 – 18
3	1.2	150 – 240	24 – 30	4.0 – 6.0	N.A.	13 - 18	13 – 18
4	1.2	150 – 240	24 – 30	4.0 – 6.0	N.A.	13 - 18	13 - 18
5	1.2	150 – 240	24 – 30	4.0 – 6.0	N.A.	13 - 18	13 - 18
6	1.2	150 – 240	24 – 30	4.0 – 6.0	N.A.	13 - 18	13 - 18
7	1.2	150 – 240	24 – 30	4.0 – 6.0	N.A.	13 - 18	13 - 18

10.2	Welding Sequence and technique	:	N.A.
	Weld pass maybe increase by 1 or 2 passes during welding to maintain leg & throat		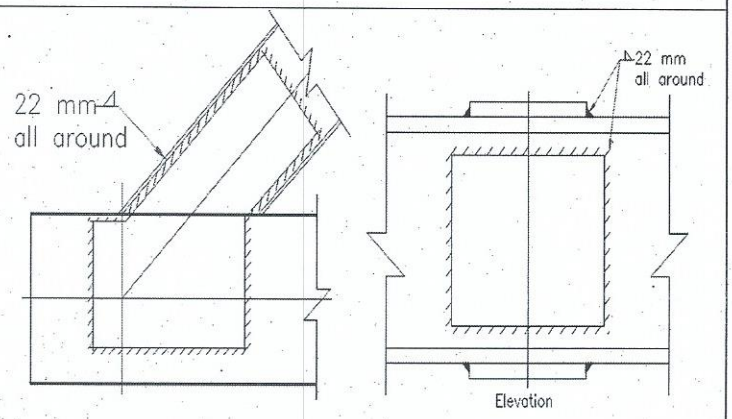

11.	Provision of run-on / run-off tabs	:	N.A.
12.	Cleaning of weld bead before laying next weld bead	:	By brush cleaning and grinding
13.	Root preparation before welding other side of groove weld	:	N.A.
14.	Preheating and inter pass temperature	:	110° C - 160°C
15.	Peening	:	N.A.
16.	Post Weld treatment	:	N.A.
17.	Rectification of weld defect	:	By re-welding after complete removal of defective weld& rectify the weld as per Cl.32.2 of IS 9595-96, using FCAW(Class I of IRS M 46) after rectification DP will be conducted.
18.	Inspection of Weld	:	Visual& D.P.
19.	Any other relevant Details	:	L0 JOINT COVER PLATE BOTTOM BEAM & ARCH BEAM COVER PLATE

स०अ० अधि० / धातु एवं रसा०
Asstt. Research Officer/M&C
रेल मंत्रालय / Ministry of Railways
अ०अ०मा०सं०, लखनऊ / R.D.S.O., Lucknow

RDSO

WELDING PROCEDURE SPECIFICATION SHEET FOR 60 m CLEAR SPAN BOW STRING GIRDER

Name and address of Fabricator		:	M/s. Bridge Track & Tower Pvt. Ltd., Plot No. 403 to 407 and 413 to 415, Sector-A, Urla Industrial Area Raipur – 492 003 (C.G.)
Welding Procedure specification No.		:	BTT/60/BS/10Dated 22/08/2023
01.	Drawing No.	:	RDSO/B-10434
02.	Welding Joint Description.	:	Fillet 20 mm
03.	Base Metal.	:	IS: 2062 – 2011, Gr. : E350 B0
04.	Welding Process	:	F.C.A.W. (Flux core Arc Welding)
05.	Welding Position.	:	Horizontal /Vertical/ Overhead
06.	Welding Consumable.		
6.1	Electrode/Wire Class Dia Type Drying Method	 : : : :	 I of IRS M 46-2018 1.2 mm Flux Cored Filler Wire. N.A.
6.2	Flux Class Type Drying Method	 : : :	 N.A. N.A. N.A.
6.3	Shielding Gas	:	CO_2
07.	Base Metal Preparation	:	Fusion Faces and adjacent surfaces are cleaned and made free from Cracks, Notches, Mill scale, Grease, Paint and Rust etc., which may affect weld quality.
7.1	Joint design Details	:	
	(Sketch showing arrangements of parts, weld bead details, weld passes & their sequence etc.) Splice cover plate with Side Plate of Top Tie beam		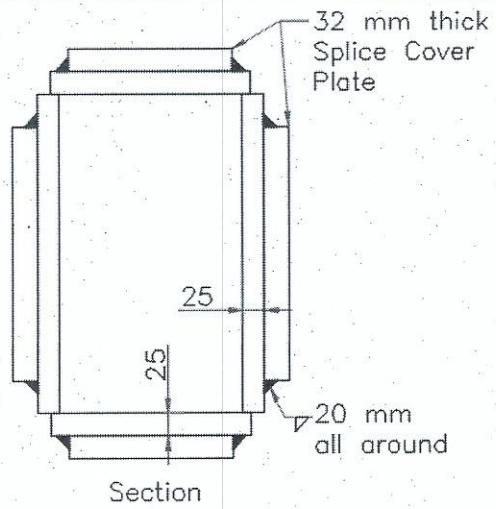 DETAIL OF SPLICE ELEVATION Ref Drg No. 10434/3
7.2	Joint preparation	:	As Per IS: 4353 – 1995, IS: 7215 & Welded Bridge Code.
08.	Welding Current	:	
	Type	:	DC
	Polarity	:	Reverse
09.	Welder qualification	:	As per IS: 7310/7307 (Part-I) – ~~1974~~ 2019
10.	Welding Parameters and technique	:	

सo अo अधि० / धातु एवं रसा०
Asstt. Research Officer/M&C
रेल मंत्रालय / Ministry of Railways
अo अo मा० सं०, लखनऊ / R.D.S O., Lucknow
RDSO

WELDING PROCEDURE SPECIFICATION SHEET FOR 60 m CLEAR SPAN BOW STRING GIRDER

10.1	Welding Parameters	:	

Weld Pass No.	Electrodes wire dia. (mm)	Current (Amps)	Arc Voltage (Volt)	Wire Feed Speed (m/min)	Travel Speed (m/min)	Electrical Stick out (mm)	Gas Flow (I/min.)
1	1.2	150 – 240	24 – 30	4.0 – 6.0	N.A.	13 - 18	13 – 18
2	1.2	150 – 240	24 – 30	4.0 – 6.0	N.A.	13 - 18	13 – 18
3	1.2	150 – 240	24 – 30	4.0 – 6.0	N.A.	13 - 18	13 – 18
4	1.2	150 – 240	24 – 30	4.0 – 6.0	N.A.	13 - 18	13 - 18
5	1.2	150 – 240	24 – 30	4.0 – 6.0	N.A.	13 - 18	13 - 18
6	1.2	150 – 240	24 – 30	4.0 – 6.0	N.A.	13 - 18	13 - 18
7	1.2	150 – 240	24 – 30	4.0 – 6.0	N.A.	13 - 18	13 - 18

10.2	Welding Sequence and technique	:	N.A.
Weld pass maybe increase by 1 or 2 passes during welding to maintain leg & throat			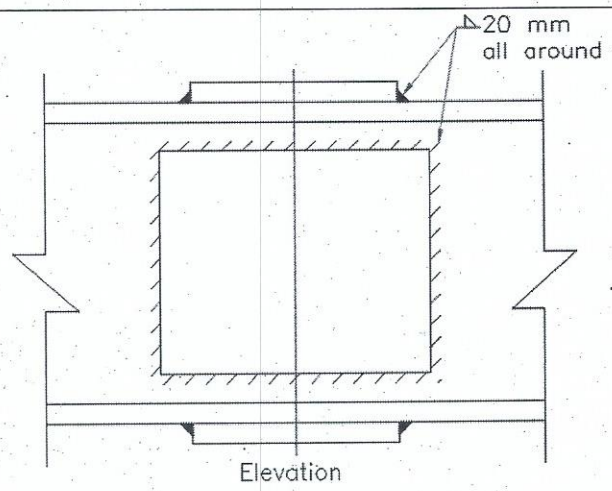

11.	Provision of run-on / run-off tabs	:	N.A.
12.	Cleaning of weld bead before laying next weld bead	:	By brush cleaning and grinding
13.	Root preparation before welding other side of groove weld	:	N.A.
14.	Preheating and inter pass temperature	:	110° C - 160°C
15.	Peening	:	N.A.
16.	Post Weld treatment	:	N.A.
17.	Rectification of weld defect	:	By re-welding after complete removal of defective weld& rectify the weld as per Cl.32.2 of IS 9595-96, using FCAW(Class I of IRS M 46) after rectification DP will be conducted.
18.	Inspection of Weld	:	Visual& D.P.
19.	Any other relevant Details	:	TOP TIE BEAM SPLICE COVER PLATE

सं०अ० अधि० / धातु एवं रसा०
Asstt. Research Officer/M&C
रेल मंत्रालय / Ministry of Railways
अ०अ०मा०सं०, लखनऊ / R.D.S.O., Lucknow

RDSO

WELDING PROCEDURE SPECIFICATION SHEET FOR 60 m CLEAR SPAN BOW STRING GIRDER

Name and address of Fabricator		:	M/s. Bridge Track & Tower Pvt. Ltd., Plot No. 403 to 407 and 413 to 415, Sector-A, Urla Industrial Area Raipur – 492 003 (C.G.)
Welding Procedure specification No.		:	BTT/60/BS/11Dated 22/08/2023
01.	Drawing No.	:	RDSO/B-10434
02.	Welding Joint Description.	:	Fillet 14 mm
03.	Base Metal.	:	IS: 2062 – 2011, Gr. : E350 B0
04.	Welding Process	:	F.C.A.W. (Flux core Arc Welding)
05.	Welding Position.	:	Horizontal /Vertical
06.	Welding Consumable.		
6.1	Electrode/Wire Class Dia Type Drying Method	 : : : :	 I of IRS M 46-2013 1.2 mm Flux Cored Filler Wire. N.A.
6.2	Flux Class Type Drying Method	 : : :	 N.A. N.A. N.A.
6.3	Shielding Gas	:	CO_2
07.	Base Metal Preparation	:	Fusion Faces and adjacent surfaces are cleaned and made free from Cracks, Notches, Mill scale, Grease, Paint and Rust etc., which may affect weld quality.
7.1	Joint design Details	:	
	(Sketch showing arrangements of parts, weld bead details, weld passes & their sequence etc.) SPLICE COVER PLATE OF INETRMEDIATE CROSS GIRDER		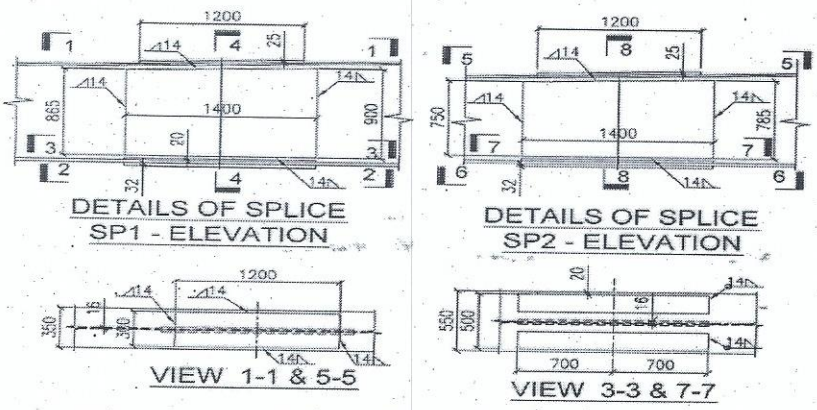 Ref Drg No. 10434/6
7.2	Joint preparation	:	As Per IS: 4353 – 1995, IS: 7215 & Welded Bridge Code.
08.	Welding Current	:	
	Type	:	DC
	Polarity	:	Reverse
09.	Welder qualification	:	As per IS: 7310/7307 (Part-I) – 1974
10.	Welding Parameters and technique	:	

सहा० अनु० / धातु एवं संसा०
Asstt. Research Officer/M&C
रेल मंत्रालय / Ministry of Railways
आर०डी०एस०ओ०, लखनऊ / R.D.S.O., Lucknow

RDSO

WELDING PROCEDURE SPECIFICATION SHEET FOR 60 m CLEAR SPAN BOW STRING GIRDER

10.1	Welding Parameters	:	

Weld Pass No.	Electrodes wire dia. (mm)	Current (Amps)	Arc Voltage (Volt)	Wire Feed Speed (m/min)	Travel Speed (m/min)	Electrical Stick out (mm)	Gas Flow (I/min.)
1	1.2	150 – 240	24 – 30	4.0 – 6.0	N.A.	13 - 18	13 – 18
2	1.2	150 – 240	24 – 30	4.0 – 6.0	N.A.	13 - 18	13 – 18
3	1.2	150 – 240	24 – 30	4.0 – 6.0	N.A.	13 - 18	13 – 18

10.2	Welding Sequence and technique	:	N.A.

Weld pass maybe increase by 1 or 2 passes during welding to maintain leg & throat

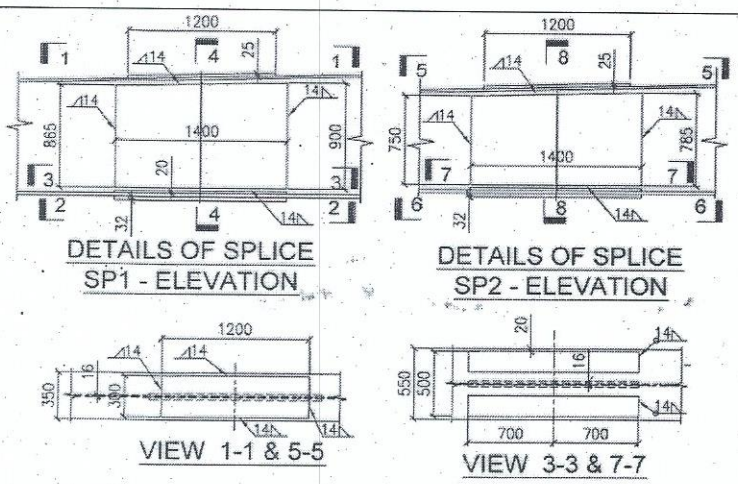

11.	Provision of run-on / run-off tabs	:	N.A.
12.	Cleaning of weld bead before laying next weld bead	:	By brush cleaning and grinding
13.	Root preparation before welding other side of groove weld	:	N.A.
14.	Preheating and inter pass temperature	:	110° C - 160°C
15.	Peening	:	N.A.
16.	Post Weld treatment	:	N.A.
17.	Rectification of weld defect	:	By re-welding after complete removal of defective weld& rectify the weld as per Cl.32.2 of IS 9595-96, using FCAW(Class I of IRS M 46) after rectification DP will be conducted..
18.	Inspection of Weld	:	Visual& D.P.
19.	Any other relevant Details	:	SPLIC PLATES INTERMEDIATE CROSS GIRDER

स०अ० अधि० / धातु एवं रसा०
Asstt. Research Officer/M&C
रेल मंत्रालय / Ministry of Railways
आ०अ०मा०सं०, लखनऊ / R.D.S.O., Lucknow

WELDING PROCEDURE SPECIFICATION SHEET FOR 60 m CLEAR SPAN BOW STRING GIRDER

Name and address of Fabricator		:	M/s. Bridge Track & Tower Pvt. Ltd., Plot No. 403 to 407 and 413 to 415, Sector-A, Urla Industrial Area Raipur – 492 003 (C.G.)
Welding Procedure specification No.		:	BTT/60/BS/12Dated 22/08/2023
01.	Drawing No.	:	RDSO/B-10434
02.	Welding Joint Description.	:	Fillet 20 mm
03.	Base Metal.	:	IS: 2062 – 2011, Gr. : E350 B0
04.	Welding Process	:	F.C.A.W. (Flux core Arc Welding)
05.	Welding Position.	:	Horizontal /Vertical
06.	Welding Consumable.		
6.1	Electrode/Wire Class Dia Type Drying Method	 : : : :	 I of IRS M 46-2013 1.2 mm Flux Cored Filler Wire. N.A.
6.2	Flux Class Type Drying Method	 : : :	 N.A. N.A. N.A.
6.3	Shielding Gas	:	CO_2
07.	Base Metal Preparation	:	Fusion Faces and adjacent surfaces are cleaned and made free from Cracks, Notches, Mill scale, Grease, Paint and Rust etc., which may affect weld quality.
7.1	Joint design Details	:	
	(Sketch showing arrangements of parts, weld bead details, weld passes & their sequence etc.) SPLICE COVER PLATE OF INETRMEDIATE CROSS GIRDER		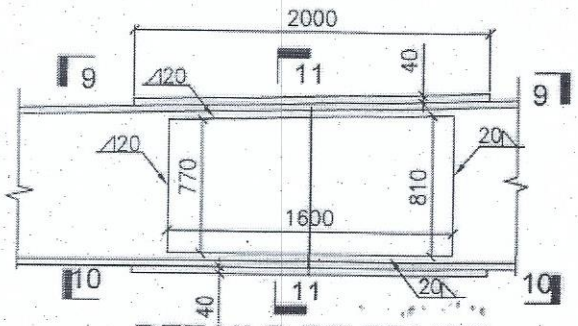 DETAILS OF SPLICE SP3 - ELEVATION Ref Drg No. 10434/6
7.2	Joint preparation	:	As Per IS: 4353 – 1995, IS: 7215 & Welded Bridge Code.
08.	Welding Current	:	
	Type	:	DC
	Polarity	:	Reverse
09.	Welder qualification	:	As per IS: 7310/7307 (Part-I) – 1974
10.	Welding Parameters and technique	:	
10.1	Welding Parameters	:	

प्र०अ० अ०/धातु एवं रसा०
Asstt. Research Officer/Met.
रेल मंत्रालय / Ministry of Railways
प्र०अ०मा०सं०, लखनऊ / R.D.S.O., Lucknow

RDSO

WELDING PROCEDURE SPECIFICATION SHEET FOR 60 m CLEAR SPAN BOW STRING GIRDER

Weld Pass No.	Electrodes wire dia. (mm)	Current (Amps)	Arc Voltage (Volt)	Wire Feed Speed (m/min)	Travel Speed (m/min)	Electrical Stick out (mm)	Gas Flow (I/min.)
1	1.2	150 – 240	24 – 30	4.0 – 6.0	N.A.	13 - 18	13 – 18
2	1.2	150 – 240	24 – 30	4.0 – 6.0	N.A.	13 - 18	13 – 18
3	1.2	150 – 240	24 – 30	4.0 – 6.0	N.A.	13 - 18	13 – 18
4	1.2	150 – 240	24 – 30	4.0 – 6.0	N.A.	13 - 18	13 – 18

10.2	Welding Sequence and technique	:	N.A.
Weld pass maybe increase by 1 or 2 passes during welding to maintain leg & throat			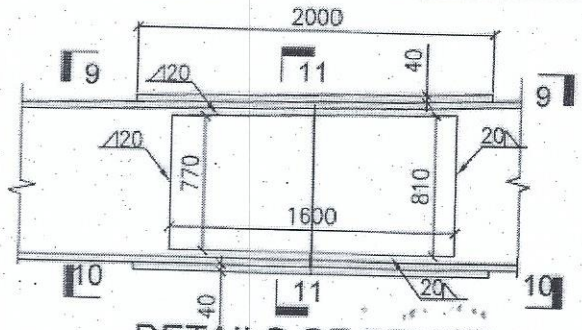 DETAILS OF SPLICE SP3 - ELEVATION

11.	Provision of run-on / run-off tabs	:	N.A.
12.	Cleaning of weld bead before laying next weld bead	:	By brush cleaning and grinding
13.	Root preparation before welding other side of groove weld	:	N.A.
14.	Preheating and inter pass temperature	:	110° C - 160°C
15.	Peening	:	N.A.
16.	Post Weld treatment	:	N.A.
17.	Rectification of weld defect	:	By re-welding after complete removal of defective weld& rectify the weld as per Cl.32.2 of IS 9595-96, using FCAW(Class I of IRS M 46) after rectification DP will be conducted.
18.	Inspection of Weld	:	Visual& D.P.
19.	Any other relevant Details	:	SPLICE PLATES INTERMEDIATE CROSS GIRDER

सहा० अधि० / धातु एवं रसा०
Asstt. Research Officer/M&C
रेल मंत्रालय / Ministry of Railways
अ०अ०मा०सं०, लखनऊ / R.D.S.O., Lucknow

WELDING PROCEDURE SPECIFICATION SHEET FOR 60 m CLEAR SPAN BOW STRING GIRDER

Name and address of Fabricator		:	M/s. Bridge Track & Tower Pvt. Ltd., Plot No. 403 to 407 and 413 to 415, Sector-A, Urla Industrial Area Raipur – 492 003 (C.G.)
Welding Procedure specification No.		:	BTT/60/BS/13Dated 22/08/2023
01.	Drawing No.	:	RDSO/B-10434
02.	Welding Joint Description.	:	Fillet 22 mm
03.	Base Metal.	:	IS: 2062 – 2011, Gr. : E350 B0
04.	Welding Process	:	F.C.A.W. (Flux core Arc Welding)
05.	Welding Position.	:	Horizontal /Vertical
06.	Welding Consumable.		
6.1	Electrode/Wire Class Dia Type Drying Method	 : : : :	 I of IRS M 46-2013 1.2 mm Flux Cored Filler Wire. N.A.
6.2	Flux Class Type Drying Method	 : : :	 N.A. N.A. N.A.
6.3	Shielding Gas	:	CO_2
07.	Base Metal Preparation	:	Fusion Faces and adjacent surfaces are cleaned and made free from Cracks, Notches, Mill scale, Grease, Paint and Rust etc., which may affect weld quality.
	Joint design Details	:	
7.1	(Sketch showing arrangements of parts, weld bead details, weld passes & their sequence etc.) SPLICE COVER PLATE OF INETRMEDIATE CROSS GIRDER		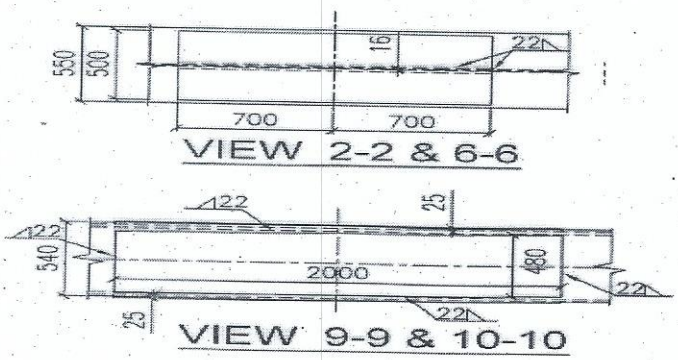 Ref Drg No. 10434/6
7.2	Joint preparation	:	As Per IS: 4353 – 1995, IS: 7215 & Welded Bridge Code.
08.	Welding Current	:	
	Type	:	DC
	Polarity	:	Reverse
09.	Welder qualification	:	As per IS: 7310/7307 (Part-I) – 1974
10.	Welding Parameters and technique	:	
10.1	Welding Parameters	:	

सहा० अधि० / धातु एवं रसा०
Asstt. Research Officer/M&C
भारतीय रेल मंत्रालय / Ministry of Railways
आर०डी०एस०ओ० लखनऊ / R.D.S.O., Lucknow
RDSO

WELDING PROCEDURE SPECIFICATION SHEET FOR 60 m CLEAR SPAN BOW STRING GIRDER

Weld Pass No.	Electrodes wire dia. (mm)	Current (Amps)	Arc Voltage (Volt)	Wire Feed Speed (m/min)	Travel Speed (m/min)	Electrical Stick out (mm)	Gas Flow (I/min.)
1	1.2	150 – 240	24 – 30	4.0 – 6.0	N.A.	13 - 18	13 – 18
2	1.2	150 – 240	24 – 30	4.0 – 6.0	N.A.	13 - 18	13 – 18
3	1.2	150 – 240	24 – 30	4.0 – 6.0	N.A.	13 - 18	13 – 18
4	1.2	150 – 240	24 – 30	4.0 – 6.0	N.A.	13 - 18	13 – 18
5	1.2	150 – 240	24 – 30	4.0 – 6.0	N.A.	13 - 18	13 – 18

10.2	Welding Sequence and technique	:	N.A.
Weld pass maybe increase by 1 or 2 passes during welding to maintain leg & throat			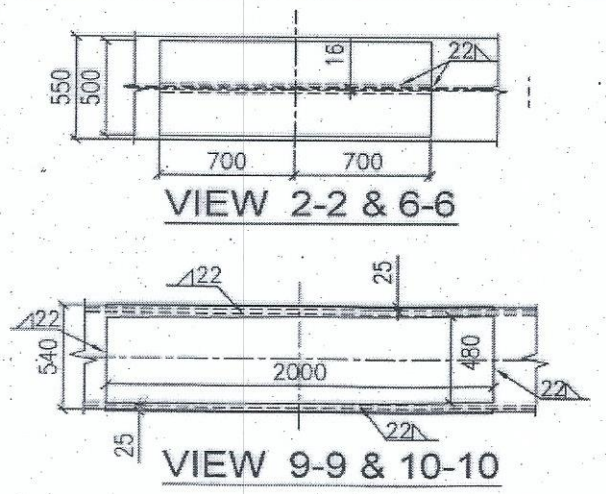

11.	Provision of run-on / run-off tabs	:	N.A.
12.	Cleaning of weld bead before laying next weld bead	:	By brush cleaning and grinding
13.	Root preparation before welding other side of groove weld	:	N.A.
14.	Preheating and inter pass temperature	:	110° C - 160°C
15.	Peening	:	N.A.
16.	Post Weld treatment	:	N.A.
17.	Rectification of weld defect	:	By re-welding after complete removal of defective weld& rectify the weld as per Cl.32.2 of IS 9595-96, using FCAW(Class I of IRS M 46) after rectification DP will be conducted.
18.	Inspection of Weld	:	Visual& D.P.
19.	Any other relevant Details	:	SPLICE PLATES INTERMEDIATE CROSS GIRDER

सहा० अधि० / धातु एवं रसा०
Asstt. Research Officer/M&C
रेल मंत्रालय / Ministry of Railways
आर०डी०एस०ओ, लखनऊ / R.D.S.O., Lucknow

RDSO

WELDING PROCEDURE SPECIFICATION SHEET FOR 60 m CLEAR SPAN BOW STRING GIRDER

Name and address of Fabricator		:	M/s. Bridge Track & Tower Pvt. Ltd., Plot No. 403 to 407 and 413 to 415, Sector-A, Urla Industrial Area Raipur – 492 003 (C.G.)
Welding Procedure specification No.		:	BTT/60/BS/14Dated 22/08/2023
01.	Drawing No.	:	RDSO/B-10434
02.	Welding Joint Description.	:	Fillet 8 mm
03.	Base Metal.	:	IS: 2062 – 2011, Gr. : E350 B0
04.	Welding Process	:	F.C.A.W. (Flux core Arc Welding)
05.	Welding Position.	:	Horizontal /Vertical
06.	Welding Consumable.		
6.1	Electrode/Wire		
	Class	:	I of IRS M 46-2013
	Dia	:	1.2 mm
	Type	:	Flux Cored Filler Wire.
	Drying Method	:	N.A.
6.2	Flux		
	Class	:	N.A.
	Type	:	N.A.
	Drying Method	:	N.A.
6.3	Shielding Gas	:	CO_2
07.	Base Metal Preparation	:	Fusion Faces and adjacent surfaces are cleaned and made free from Cracks, Notches, Mill scale, Grease, Paint and Rust etc., which may affect weld quality.
	Joint design Details	:	
7.1	(Sketch showing arrangements of parts, weld bead details, weld passes & their sequence etc.) Stiffener Plate of Cross Girder Int. crossgirder stiffener (not rib) in End cross girder diaphram		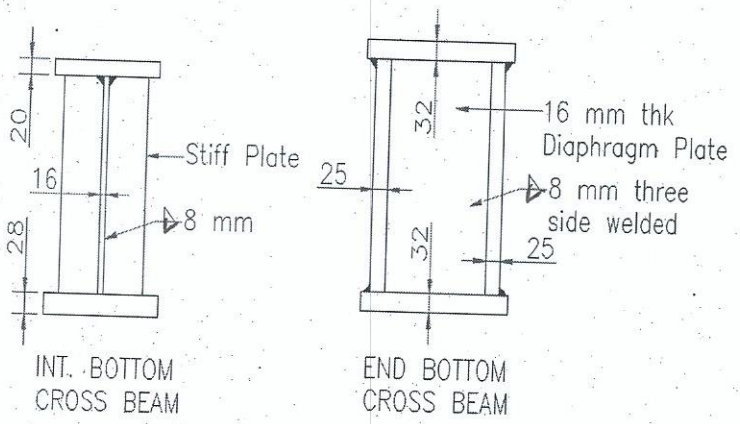 Ref Drg No. 10434/6
7.2	Joint preparation	:	As Per IS: 4353 – 1995, IS: 7215 & Welded Bridge Code.
08.	Welding Current	:	
	Type	:	DC
	Polarity	:	Reverse
09.	Welder qualification	:	As per IS: 7310/7307 (Part-I) – 1974
10.	Welding Parameters and technique	:	
10.1	Welding Parameters	:	

सं०अ० अधि० / धातु एवं रसा०
Asstt. Research Officer/M&C
रेल मंत्रालय / Ministry of Railways
आर०डी०एस०ओ, लखनऊ / R.D.S.O., Lucknow

RDSO

WELDING PROCEDURE SPECIFICATION SHEET FOR 60 m CLEAR SPAN BOW STRING GIRDER

Weld Pass No.	Electrodes wire dia. (mm)	Current (Amps)	Arc Voltage (Volt)	Wire Feed Speed (m/min)	Travel Speed (m/min)	Electrical Stick out (mm)	Gas Flow (I/min.)
1	1.2	150 – 240	24 – 30	4.0 – 6.0	N.A.	13 - 18	13 – 18
2	1.2	150 – 240	24 – 30	4.0 – 6.0	N.A.	13 - 18	13 – 18

10.2	Welding Sequence and technique	:	N.A.
	Weld pass maybe increase by 1 or 2 passes during welding to maintain leg & throat		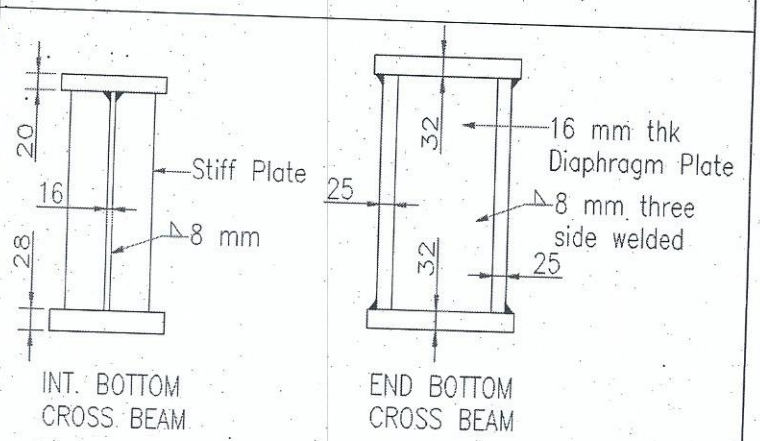

11.	Provision of run-on / run-off tabs	:	N.A.
12.	Cleaning of weld bead before laying next weld bead	:	By brush cleaning and grinding
13.	Root preparation before welding other side of groove weld	:	N.A.
14.	Preheating and inter pass temperature	:	110° C - 160°C
15.	Peening	:	N.A.
16.	Post Weld treatment	:	N.A.
17.	Rectification of weld defect	:	By re-welding after complete removal of defective weld& rectify the weld as per Cl.32.2 of IS 9595-96, using FCAW(Class I of IRS M 46) after rectification DP will be conducted.
18.	Inspection of Weld	:	Visual& D.P.
19.	Any other relevant Details	:	STIFFENER PLATE OFCROSS GIRDER

सoअo अधिo / धातु एवं रसाo
Asstt. Research Officer/M&C
रेल मंत्रालय / Ministry of Railways
आरoडीoएसoओ, लखनऊ / R.D.S O., Lucknow

RDSO

WELDING PROCEDURE SPECIFICATION SHEET FOR 60 m CLEAR SPAN BOW STRING GIRDER

Name and address of Fabricator		:	M/s. Bridge Track & Tower Pvt. Ltd., Plot No. 403 to 407 and 413 to 415, Sector-A, Urla Industrial Area Raipur – 492 003 (C.G.)
Welding Procedure specification No.		:	BTT/60/BS/15Dated 22/08/2023
01.	Drawing No.	:	RDSO/B-10434
02.	Welding Joint Description.	:	Fillet 20 mm
03.	Base Metal.	:	IS: 2062 – 2011, Gr. : E350 B0
04.	Welding Process	:	~~F.C.A.W. (Flux core Arc Welding)~~ SAW
05.	Welding Position.	:	~~Horizontal /Vertical~~ Flate
06.	Welding Consumable.		
6.1	Electrode/Wire		
	Class	:	~~I of IRS M 46-2013~~ W2 IRS m 39-2020
	Dia	:	~~1.2 mm~~ 4 mm dia
	Type	:	~~Flux Cored Filler Wire.~~ Cu coated Wire
	Drying Method	:	N.A.
6.2	Flux		
	Class	:	~~N.A.~~ ~~W2~~ F2 of IRS m 39-2020
	Type	:	N.A.
	Drying Method	:	N.A.
6.3	Shielding Gas	:	~~CO_2~~ N.A
07.	Base Metal Preparation	:	Fusion Faces and adjacent surfaces are cleaned and made free from Cracks, Notches, Mill scale, Grease, Paint and Rust etc., which may affect weld quality.
	Joint design Details	:	
7.1	(Sketch showing arrangements of parts, weld bead details, weld passes & their sequence etc.) Flange Plate of hanger with side plate		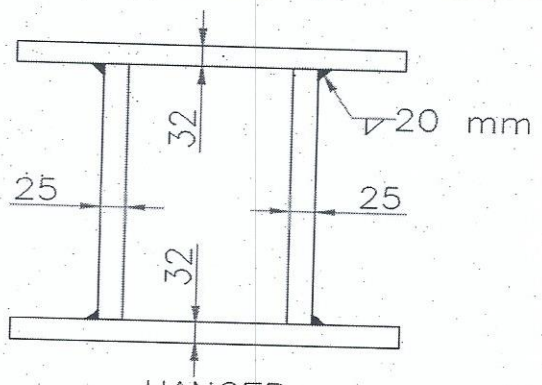 HANGER Elevation of Hanger Ref Drg No. 10434/9
7.2	Joint preparation	:	As Per IS: 4353 – 1995, IS: 7215 & Welded Bridge Code.
08.	Welding Current	:	
	Type	:	DC
	Polarity	:	Reverse
09.	Welder qualification	:	As per IS: 7310/7307 (Part-I) – 1974
10.	Welding Parameters and technique	:	
10.1	Welding Parameters	:	

सं०अ० अधि० / धातु एवं रसा०
Asstt. Research Officer/M&C
रेल मंत्रालय / Ministry of Railways
अ०अ०मा०सं०, लखनऊ / R.D.S.O., Lucknow
RDSO

WELDING PROCEDURE SPECIFICATION SHEET FOR 60 m CLEAR SPAN BOW STRING GIRDER

Weld Pass No.	Electrodes wire dia. (mm)	Current (Amps)	Arc Voltage (Volt)	Wire Feed Speed (m/min)	Travel Speed (m/min)	Electrical Stick out (mm)	Gas Flow (I/min.)
1	~~1.2~~ 4	~~150 – 240~~ 450-550	24 – 30	~~4.0 – 6.0~~ 3 – 2.5	.3 – .5	13 - 18	13 – 18
2	1.2	150 – 240	24 – 30	4.0 – 6.0	N.A.	13 - 18	13 – 18
3	1.2	150 – 240	24 – 30	4.0 – 6.0	N.A.	13 - 18	13 – 18
4	1.2	150 – 240	24 – 30	4.0 – 6.0	N.A.	13 - 18	13 - 18

10.2	Welding Sequence and technique	:	N.A.
Weld pass maybe increase by 1 or 2 passes during welding to maintain leg & throat			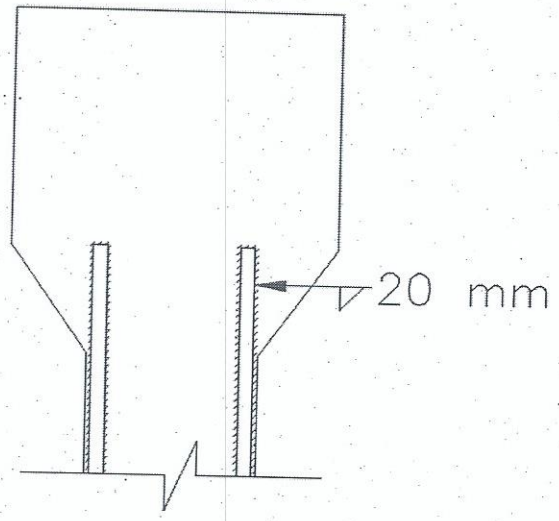

11.	Provision of run-on / run-off tabs	:	N.A.
12.	Cleaning of weld bead before laying next weld bead	:	By brush cleaning and grinding
13.	Root preparation before welding other side of groove weld	:	N.A.
14.	Preheating and inter pass temperature	:	110° C - 160°C , 150-250°C
15.	Peening	:	N.A.
16.	Post Weld treatment	:	N.A.
17.	Rectification of weld defect	:	By re-welding after complete removal of defective weld& rectify the weld as per Cl.32.2 of IS 9595-96, using FCAW(Class I of IRS M 46) after rectification DP will be conducted.
18.	Inspection of Weld	:	Visual& D.P.
19.	Any other relevant Details	:	SIDE PLATE OF HANGER WITH FLANGE PLATE

सहा० अधि० / धातु एवं रसा०
Asstt. Research Officer/M&C
रेल मंत्रालय / Ministry of Railways
अनुसंधान, लखनऊ / R.D.S.O., Lucknow

WELDING PROCEDURE SPECIFICATION SHEET FOR 60 m CLEAR SPAN BOW STRING GIRDER

Name and address of Fabricator		:	M/s. Bridge Track & Tower Pvt. Ltd., Plot No. 403 to 407 and 413 to 415, Sector-A, Urla Industrial Area Raipur – 492 003 (C.G.)
Welding Procedure specification No.		:	BTT/60/BS/16Dated 22/08/2023
01.	Drawing No.	:	RDSO/B-10434
02.	Welding Joint Description.	:	Fillet 20 mm
03.	Base Metal.	:	IS: 2062 – 2011, Gr. : E350 B0
04.	Welding Process	:	F.C.A.W. (Flux core Arc Welding)
05.	Welding Position.	:	Horizontal /Vertical/ Overhead
06.	Welding Consumable.		
6.1	Electrode/Wire Class Dia Type Drying Method	 : : : :	 I of IRS M 46-2013 1.2 mm Flux Cored Filler Wire. N.A.
6.2	Flux Class Type Drying Method	 : : :	 N.A. N.A. N.A.
6.3	Shielding Gas	:	CO_2
07.	Base Metal Preparation	:	Fusion Faces and adjacent surfaces are cleaned and made free from Cracks, Notches, Mill scale, Grease, Paint and Rust etc., which may affect weld quality.
	Joint design Details	:	
7.1	(Sketch showing arrangements of parts, weld bead details, weld passes & their sequence etc.) Flange Plate of hanger with side plate of arch & bottom beam		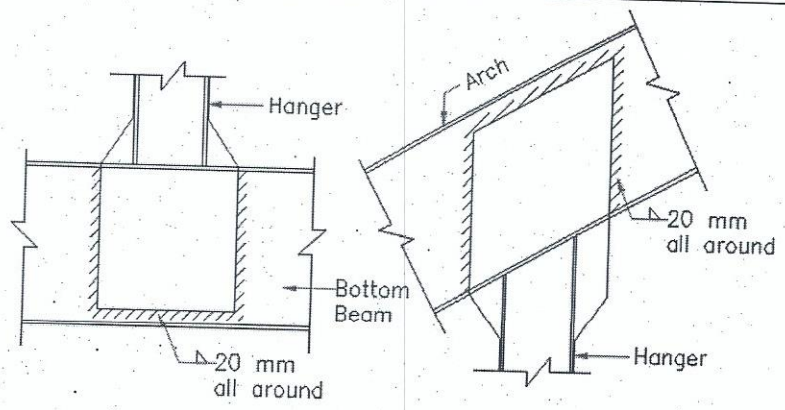 ELEVATION Elevation of Joint U1, U2, U3, U4, U5 Ref Drg No. 10434/2 Elevation of Joint L1, L2, L3 & L4 Ref Drg No. 10434/5
7.2	Joint preparation	:	As Per IS: 4353 – 1995, IS: 7215 & Welded Bridge Code.
08.	Welding Current	:	
	Type	:	DC
	Polarity	:	Reverse
09.	Welder qualification	:	As per IS: 7310/7307 (Part-I) – 1974
10.	Welding Parameters and technique	:	

सं०अ० अधि० / धातु एवं रसा०
Asstt. Research Officer/M&C
रेल मंत्रालय / Ministry of Railways
आ०अ०मा०सं०, लखनऊ / R.D.S.O., Lucknow

WELDING PROCEDURE SPECIFICATION SHEET FOR 60 m CLEAR SPAN BOW STRING GIRDER

10.1	Welding Parameters	:	

Weld Pass No.	Electrodes wire dia. (mm)	Current (Amps)	Arc Voltage (Volt)	Wire Feed Speed (m/min)	Travel Speed (m/min)	Electrical Stick out (mm)	Gas Flow (I/min.)
1	1.2	150 – 240	24 – 30	4.0 – 6.0	N.A.	13 - 18	13 – 18
2	1.2	150 – 240	24 – 30	4.0 – 6.0	N.A.	13 - 18	13 – 18
3	1.2	150 – 240	24 – 30	4.0 – 6.0	N.A.	13 - 18	13 – 18
4	1.2	150 – 240	24 – 30	4.0 – 6.0	N.A.	13 - 18	13 - 18
5	1.2	150 – 240	24 – 30	4.0 – 6.0	N.A.	13 - 18	13 - 18
6	1.2	150 – 240	24 – 30	4.0 – 6.0	N.A.	13 - 18	13 - 18

10.2	Welding Sequence and technique	:	N.A.
Weld pass maybe increase by 1 or 2 passes during welding to maintain leg & throat			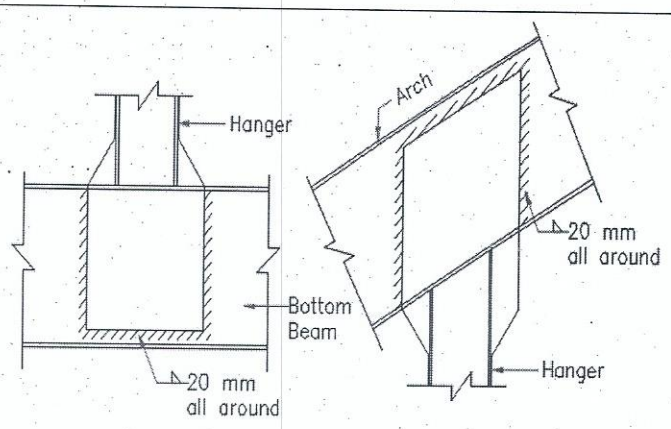

11.	Provision of run-on / run-off tabs	:	N.A.
12.	Cleaning of weld bead before laying next weld bead	:	By brush cleaning and grinding
13.	Root preparation before welding other side of groove weld	:	N.A.
14.	Preheating and inter pass temperature	:	110° C - 160°C
15..	Peening	:	N.A.
16.	Post Weld treatment	:	N.A.
17.	Rectification of weld defect	:	By re-welding after complete removal of defective weld& rectify the weld as per Cl.32.2 of IS 9595-96, using FCAW(Class I of IRS M 46) after rectification DP will be conducted.
18.	Inspection of Weld	:	Visual& D.P.
19.	Any other relevant Details	:	HANGER WITH BOTTOM BEAM & ARCH

सं०अ० अधि० / धातु एवं रसा०
Asstt. Research Officer/M&C
रेल मं० / Ministry of Railways
आ०अ०मा०सं०, लखनऊ / R.D.S.O., Lucknow

WELDING PROCEDURE SPECIFICATION SHEET FOR 60 m CLEAR SPAN BOW STRING GIRDER

Name and address of Fabricator		:	M/s. Bridge Track & Tower Pvt. Ltd., Plot No. 403 to 407 and 413 to 415, Sector-A, Urla Industrial Area Raipur – 492 003 (C.G.)
Welding Procedure specification No.		:	BTT/60/BS/17Dated 22/08/2023
01.	Drawing No.	:	RDSO/B-10434
02.	Welding Joint Description.	:	Fillet 12 mm
03.	Base Metal.	:	IS: 2062 – 2011, Gr. : E350 B0
04.	Welding Process	:	F.C.A.W. (Flux core Arc Welding)
05.	Welding Position.	:	Horizontal /Vertical/Overhead
06.	Welding Consumable.		
6.1	Electrode/Wire		
	Class	:	I of IRS M 46-2013
	Dia	:	1.2 mm
	Type	:	Flux Cored Filler Wire.
	Drying Method	:	N.A.
6.2	Flux		
	Class	:	N.A.
	Type	:	N.A.
	Drying Method	:	N.A.
6.3	Shielding Gas	:	CO_2
07.	Base Metal Preparation	:	Fusion Faces and adjacent surfaces are cleaned and made free from Cracks, Notches, Mill scale, Grease, Paint and Rust etc., which may affect weld quality.
	Joint design Details	:	
7.1	(Sketch showing arrangements of parts, weld bead details, weld passes & their sequence etc.) Bottom Cross Beam with Bottom Beam		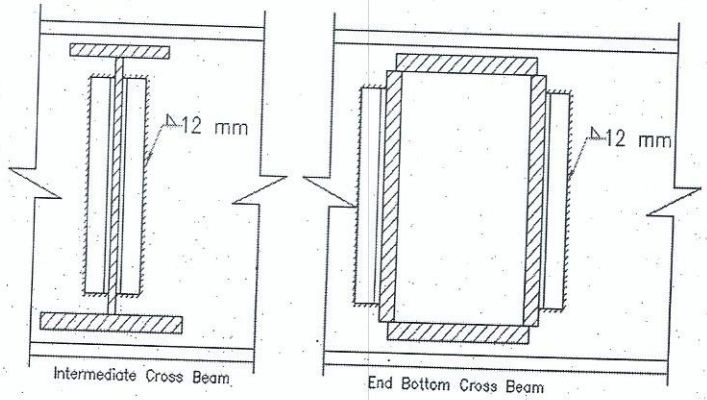 Connection detail BCB1, BCB2 BCB3 Ref Drg No. 10434/6
7.2	Joint preparation	:	As Per IS: 4353 – 1995, IS: 7215 & Welded Bridge Code.
08.	Welding Current	:	
	Type	:	DC
	Polarity	:	Reverse
09.	Welder qualification	:	As per IS: 7310/7307 (Part-I) – 1974
10.	Welding Parameters and technique	:	

सं०अ० अधि० / धातु एवं रसा०
Asstt. Research Officer/M&C
रेल मंत्रालय / Ministry of Railways
अ०अ०मा०सं०, लखनऊ / R.D.S O., Lucknow

RDSO

WELDING PROCEDURE SPECIFICATION SHEET FOR 60 m CLEAR SPAN BOW STRING GIRDER

10.1	Welding Parameters	:	

Weld Pass No.	Electrodes wire dia. (mm)	Current (Amps)	Arc Voltage (Volt)	Wire Feed Speed (m/min)	Travel Speed (m/min)	Electrical Stick out (mm)	Gas Flow (I/min.)
1	1.2	150 – 240	24 – 30	4.0 – 6.0	N.A.	13 - 18	13 – 18
2	1.2	150 – 240	24 – 30	4.0 – 6.0	N.A.	13 - 18	13 – 18
3	1.2	150 – 240	24 – 30	4.0 – 6.0	N.A.	13 - 18	13 – 18

10.2	Welding Sequence and technique	:	N.A.

Weld pass maybe increase by 1 or 2 passes during welding to maintain leg & throat

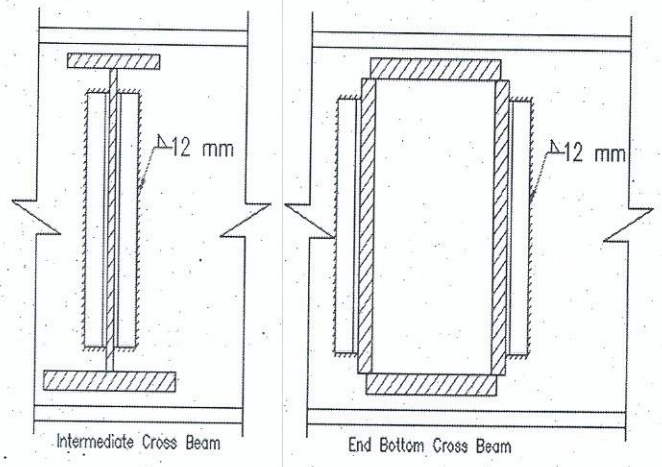

11.	Provision of run-on / run-off tabs	:	N.A.
12.	Cleaning of weld bead before laying next weld bead	:	By brush cleaning and grinding
13.	Root preparation before welding other side of groove weld	:	N.A.
14.	Preheating and inter pass temperature	:	110° C - 160°C
15.	Peening	:	N.A.
16.	Post Weld treatment	:	N.A.
17.	Rectification of weld defect	:	By re-welding after complete removal of defective weld& rectify the weld as per Cl.32.2 of IS 9595-96, using FCAW(Class I of IRS M 46) after rectification DP will be conducted.
18.	Inspection of Weld	:	Visual& D.P.
19.	Any other relevant Details	:	BOTTOM CROSS BEAM WITH BOTTOM BEAM. INTERMEDIATE CROSS GIRDER WITH BOTTOM BEAM.

सं०अ० अधि० / धातु एवं रसा०
Asstt. Research Officer/M&C
रेल मंत्रालय / Ministry of Railways
आर०डी०एस०ओ०, लखनऊ / R.D.S.O., Lucknow

WELDING PROCEDURE SPECIFICATION SHEET FOR 60 m CLEAR SPAN BOW STRING GIRDER

Name and address of Fabricator		:	M/s. Bridge Track & Tower Pvt. Ltd., Plot No. 403 to 407 and 413 to 415, Sector-A, Urla Industrial Area Raipur – 492 003 (C.G.)
Welding Procedure specification No.		:	BTT/60/BS/18Dated 22/08/2023
01.	Drawing No.	:	RDSO/B-10434
02.	Welding Joint Description.	:	Fillet 18 mm
03.	Base Metal.	:	IS: 2062 – 2011, Gr. : E350 B0
04.	Welding Process	:	F.C.A.W. (Flux core Arc Welding)
05.	Welding Position.	:	Horizontal /Vertical/Overhead
06.	Welding Consumable.		
6.1	Electrode/Wire Class Dia Type Drying Method	 : : : :	 I of IRS M 46-2013 1.2 mm Flux Cored Filler Wire. N.A.
6.2	Flux Class Type Drying Method	 : : :	 N.A. N.A. N.A.
6.3	Shielding Gas	:	CO_2
07.	Base Metal Preparation	:	Fusion Faces and adjacent surfaces are cleaned and made free from Cracks, Notches, Mill scale, Grease, Paint and Rust etc., which may affect weld quality.
7.1	Joint design Details	:	
	(Sketch showing arrangements of parts, weld bead details, weld passes & their sequence etc.) Top Tie Beam with Flange of Hanger		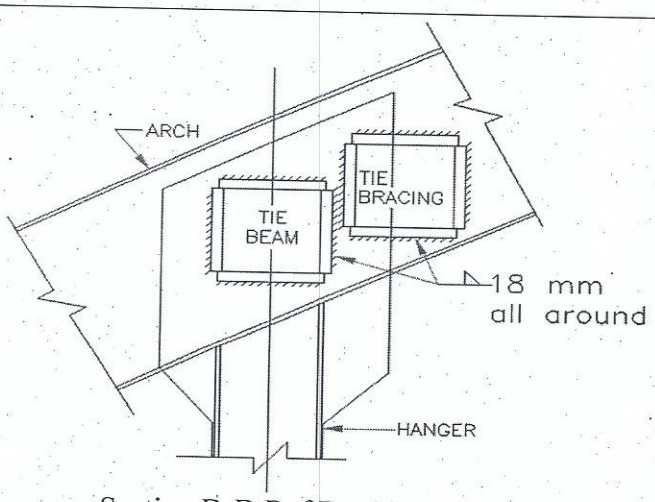 Section D-D Ref Drg No. 10434/3
7.2	Joint preparation	:	As Per IS: 4353 – 1995, IS: 7215 & Welded Bridge Code.
08.	Welding Current	:	
	Type	:	DC
	Polarity	:	Reverse
09.	Welder qualification	:	As per IS: 7310/7307 (Part-I) – 1974
10.	Welding Parameters and technique	:	

सं०अ० अधि० / धातु एवं रसा०
Asstt. Research Officer/M&C
रेल मंत्रालय / Ministry of Railways
आर०डी०एस०ओ०, लखनऊ / R.D.S.O., Lucknow

WELDING PROCEDURE SPECIFICATION SHEET FOR 60 m CLEAR SPAN BOW STRING GIRDER

10.1	Welding Parameters	:	

Weld Pass No.	Electrodes wire dia. (mm)	Current (Amps)	Arc Voltage (Volt)	Wire Feed Speed (m/min)	Travel Speed (m/min)	Electrical Stick out (mm)	Gas Flow (I/min.)
1	1.2	150 – 240	24 – 30	4.0 – 6.0	N.A.	13 - 18	13 – 18
2	1.2	150 – 240	24 – 30	4.0 – 6.0	N.A.	13 - 18	13 – 18
3	1.2	150 – 240	24 – 30	4.0 – 6.0	N.A.	13 - 18	13 – 18
4	1.2	150 – 240	24 – 30	4.0 – 6.0	N.A.	13 - 18	13 – 18
5	1.2	150 – 240	24 – 30	4.0 – 6.0	N.A.	13 - 18	13 – 18

10.2	Welding Sequence and technique	:	N.A.
Weld pass maybe increase by 1 or 2 passes during welding to maintain leg & throat			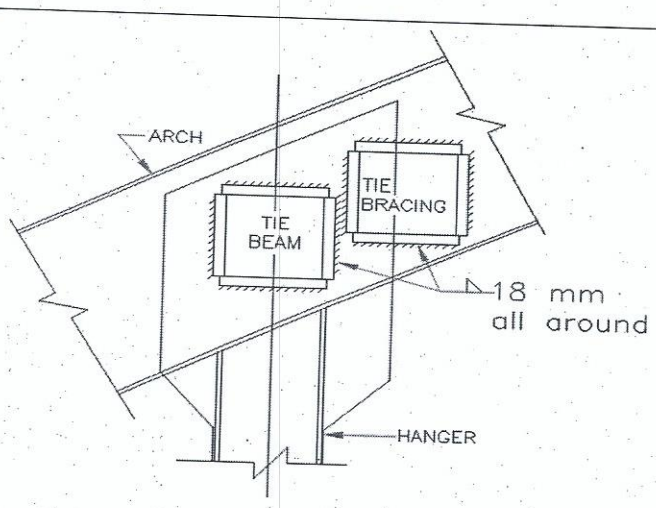

11.	Provision of run-on / run-off tabs	:	N.A.
12.	Cleaning of weld bead before laying next weld bead	:	By brush cleaning and grinding
13.	Root preparation before welding other side of groove weld	:	N.A.
14.	Preheating and inter pass temperature	:	110° C - 160°C
15.	Peening	:	N.A.
16.	Post Weld treatment	:	N.A.
17.	Rectification of weld defect	:	By re-welding after complete removal of defective weld& rectify the weld as per Cl.32.2 of IS 9595-96, using FCAW(Class I of IRS M 46) after rectification DP will be conducted.
18.	Inspection of Weld	:	Visual& D.P.
19.	Any other relevant Details	:	TOP TIE BEAM WITH HANGER& ARCH BEAM TOP DIAGONAL TIE BEAM WITH TOP TIE BEAM & ARCHBEAM

स०अ० अधि० / धातु एवं रसा०
Asstt. Research Officer/M&C
रेल मंत्रालय / Ministry of Railways
आर०डी०एस०ओ० लखनऊ / R.D.S.O., Lucknow

WELDING PROCEDURE SPECIFICATION SHEET FOR 60 m CLEAR SPAN BOW STRING GIRDER

Name and address of Fabricator		:	M/s. Bridge Track & Tower Pvt. Ltd., Plot No. 403 to 407 and 413 to 415, Sector-A, Urla Industrial Area Raipur – 492 003 (C.G.)
Welding Procedure specification No.		:	BTT/60/BS/19Dated 22/08/2023
01.	Drawing No.	:	RDSO/B-10434
02.	Welding Joint Description.	:	Fillet 20 mm
03.	Base Metal.	:	IS: 2062 – 2011, Gr. : E350 B0
04.	Welding Process	:	F.C.A.W. (Flux core Arc Welding)
05.	Welding Position.	:	Horizontal /Vertical /Overhead
06.	Welding Consumable.		
6.1	Electrode/Wire Class Dia Type Drying Method	 : : : :	 I of IRS M 46-2013 1.2 mm Flux Cored Filler Wire. N.A.
6.2	Flux Class Type Drying Method	 : : :	 N.A. N.A. N.A.
6.3	Shielding Gas	:	CO_2
07.	Base Metal Preparation	:	Fusion Faces and adjacent surfaces are cleaned and made free from Cracks, Notches, Mill scale, Grease, Paint and Rust etc., which may affect weld quality.
7.1	Joint design Details	:	
	(Sketch showing arrangements of parts, weld bead details, weld passes & their sequence etc.) Section B-B Ref Drg No. 10434/2 Section E-E Ref Drg No. 10434/5 Section D-D Ref Drg No. 10434/3 Section F-F &G-G Ref Drg No. 10434/6		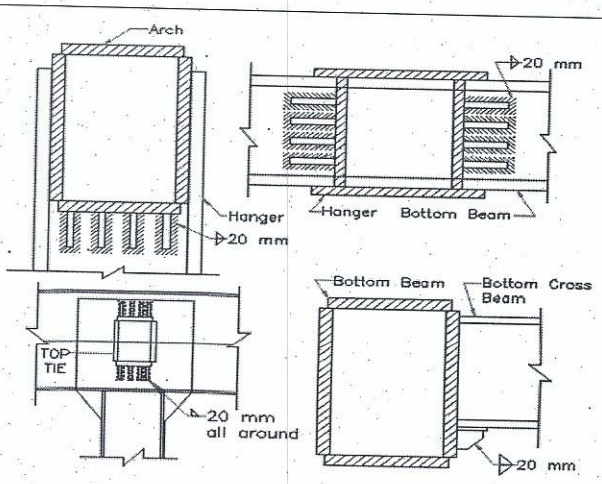
7.2	Joint preparation	:	As Per IS: 4353 – 1995, IS: 7215 & Welded Bridge Code.
08.	Welding Current	:	
	Type	:	DC
	Polarity	:	Reverse
09.	Welder qualification	:	As per IS: 7310/7307 (Part-I) – 1974
10.	Welding Parameters and technique	:	
10.1	Welding Parameters	:	

सं०अ० अधि० / धातु एवं रसा०
Asstt. Research Officer/M&C
रेल मंत्रालय / Ministry of Railways
आर०डी०एस०ओ० / R.D.S.O., Lucknow

WELDING PROCEDURE SPECIFICATION SHEET FOR 60 m CLEAR SPAN BOW STRING GIRDER

Weld Pass No.	Electrodes wire dia. (mm)	Current (Amps)	Arc Voltage (Volt)	Wire Feed Speed (m/min)	Travel Speed (m/min)	Electrical Stick out (mm)	Gas Flow (I/min.)
1	1.2	150 – 240	24 – 30	4.0 – 6.0	N.A.	13 - 18	13 – 18
2	1.2	150 – 240	24 – 30	4.0 – 6.0	N.A.	13 - 18	13 – 18
3	1.2	150 – 240	24 – 30	4.0 – 6.0	N.A.	13 - 18	13 – 18
4	1.2	150 – 240	24 – 30	4.0 – 6.0	N.A.	13 - 18	13 – 18
5	1.2	150 – 240	24 – 30	4.0 – 6.0	N.A.	13 - 18	13 – 18
6	1.2	150 – 240	24 – 30	4.0 – 6.0	N.A.	13 - 18	13 – 18

10.2	Welding Sequence and technique	:	N.A.
Weld pass maybe increase by 1 or 2 passes during welding to maintain leg & throat			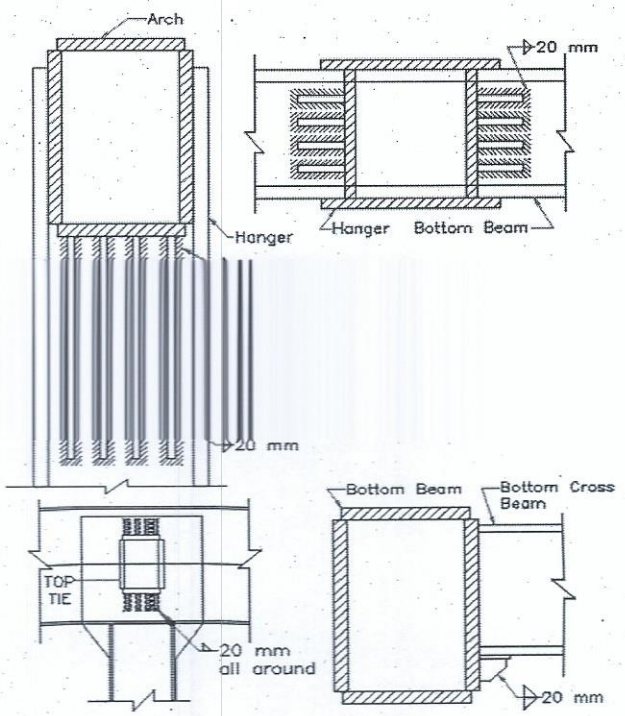

11.	Provision of run-on / run-off tabs	:	N.A.
12.	Cleaning of weld bead before laying next weld bead	:	By brush cleaning and grinding
13.	Root preparation before welding other side of groove weld	:	N.A.
14.	Preheating and inter pass temperature	:	110° C - 160°C
15.	Peening	:	N.A.
16.	Post Weld treatment	:	N.A.
17.	Rectification of weld defect	:	By re-welding after complete removal of defective weld& rectify the weld as per Cl.32.2 of IS 9595-96, using FCAW(Class I of IRS M 46) after rectification DP will be conducted.
18.	Inspection of Weld	:	Visual& D.P.
19.	Any other relevant Details	:	Stiffener plate of hanger with Arch & Bottom Beam Stiffener plate at L0 joint Stiffener plate of Bottom Cross Girder with Bottom Beam. Stiffener plate of Top Tie beam

WELDING PROCEDURE SPECIFICATION SHEET FOR 60 m CLEAR SPAN BOW STRING GIRDER

	Name and address of Fabricator	:	M/s. Bridge Track & Tower Pvt. Ltd., Plot No. 403 to 407 and 413 to 415, Sector-A, Urla Industrial Area Raipur – 492 003 (C.G.)
	Welding Procedure specification No.	:	BTT/60/BS/20Dated 22/08/2023
01.	Drawing No.	:	RDSO/B-10434
02.	Welding Joint Description.	:	Fillet 6 mm
03.	Base Metal.	:	IS: 2062 – 2011, Gr. : E350 B0
04.	Welding Process	:	F.C.A.W. (Flux core Arc Welding)
05.	Welding Position.	:	Horizontal /Vertical
06.	Welding Consumable.		
6.1	Electrode/Wire		
	Class	:	I of IRS M 46-2013
	Dia	:	1.2 mm
	Type	:	Copper coated Solid Wire.
	Drying Method	:	N.A.
6.2	Flux		
	Class	:	N.A.
	Type	:	N.A.
	Drying Method	:	N.A.
6.3	Shielding Gas	:	CO_2
07.	Base Metal Preparation	:	Fusion Faces and adjacent surfaces are cleaned and made free from Cracks, Notches, Mill scale, Grease, Paint and Rust etc., which may affect weld quality.
	Joint design Details	:	
7.1	(Sketch showing arrangements of parts, weld bead details, weld passes & their sequence etc.)		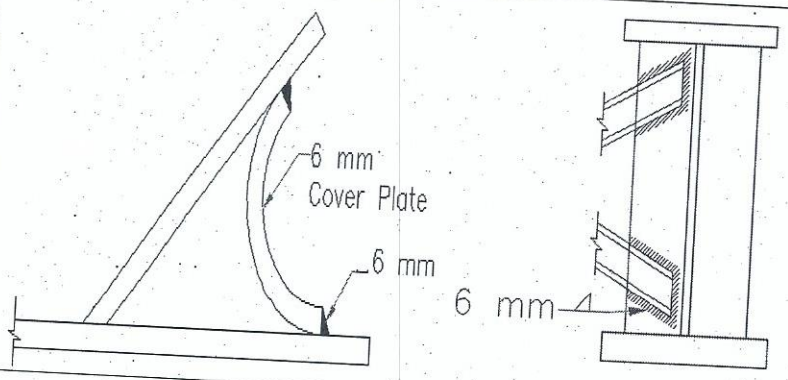
7.2	Joint preparation	:	As Per IS: 4353 – 1995, IS: 7215 & Welded Bridge Code.
08.	Welding Current	:	
	Type	:	DC
	Polarity	:	Reverse
09.	Welder qualification	:	As per IS: 7310/7307 (Part-I) – 1974
10.	Welding Parameters and technique	:	
10.1	Welding Parameters	:	

सहा० आचि० / धातु एवं रसा०
Asstt. Research Officer/M&C
रेल मंत्रालय / Ministry of Railways
अ०अ०मा०सं० लखनऊ / R.D.S.O., Lucknow

RDSO

WELDING PROCEDURE SPECIFICATION SHEET FOR 60 m CLEAR SPAN BOW STRING GIRDER

Weld Pass No.	Electrodes wire dia. (mm)	Current (Amps)	Arc Voltage (Volt)	Wire Feed Speed (m/min)	Travel Speed (m/min)	Electrical Stick out (mm)	Gas Flow (I/min.)
1	1.2	150 – 240	24 – 30	4.0 – 6.0	N.A.	13 - 18	13 – 18
2	1.2	150 – 240	24 – 30	4.0 – 6.0	N.A.	13 - 18	13 – 18
3	1.2	150 – 240	24 – 30	4.0 – 6.0	N.A.	13 - 18	13 – 18
4	1.2	150 – 240	24 – 30	4.0 – 6.0	N.A.	13 - 18	13 – 18
5	1.2	150 – 240	24 – 30	4.0 – 6.0	N.A.	13 - 18	13 – 18
6	1.2	150 – 240	24 – 30	4.0 – 6.0	N.A.	13 - 18	13 – 18

10.2	Welding Sequence and technique	:	N.A.
Weld pass maybe increase by 1 or 2 passes during welding to maintain leg & throat			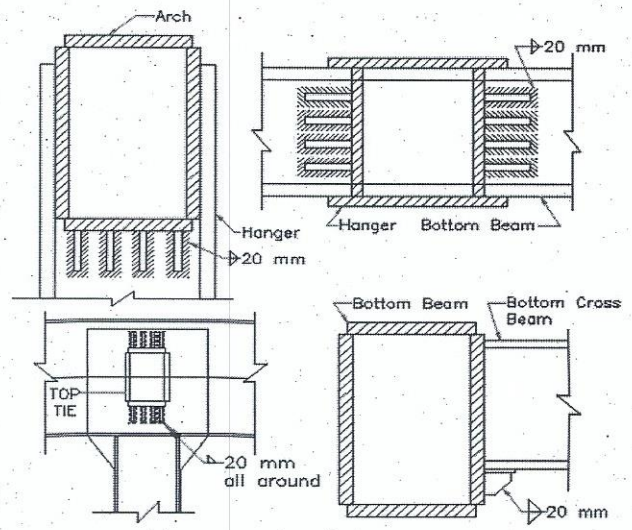

11.	Provision of run-on / run-off tabs	:	N.A.
12.	Cleaning of weld bead before laying next weld bead	:	By brush cleaning and grinding
13.	Root preparation before welding other side of groove weld	:	N.A.
14.	Preheating and inter pass temperature	:	110° C - 160°C
15.	Peening	:	N.A.
16.	Post Weld treatment	:	N.A.
17.	Rectification of weld defect	:	By re-welding after complete removal of defective weld& rectify the weld as per Cl.32.2 of IS 9595-96, using FCAW(Class I of IRS M 46) after rectification DP will be conducted.
18.	Inspection of Weld	:	Visual& D.P.
19.	Any other relevant Details	:	Stiffener plate of hanger with Arch & Bottom Beam Stiffener plate at L0 joint Stiffener plate of Bottom Cross Girder with Bottom Beam. Stiffener plate of Top Tie beam

सहा० अधि० / धातु एवं रसा०
Asstt. Research Officer/M&C
रेल मंत्रालय / Ministry of Railways
आ०अ०मा०सं०, लखनऊ / R.D.S.O., Lucknow

WELDING PROCEDURE SPECIFICATION SHEET FOR 60 m CLEAR SPAN BOW STRING GIRDER

Weld Pass No.	Electrodes wire dia. (mm)	Current (Amps)	Arc Voltage (Volt)	Wire Feed Speed (m/min)	Travel Speed (m/min)	Electrical Stick out (mm)	Gas Flow (I/min.)
1	1.2	190 – 220	24 – 26	4.0 – 6.0	N.A.	13 - 18	16 - 18

10.2	Welding Sequence and technique	:	N.A.

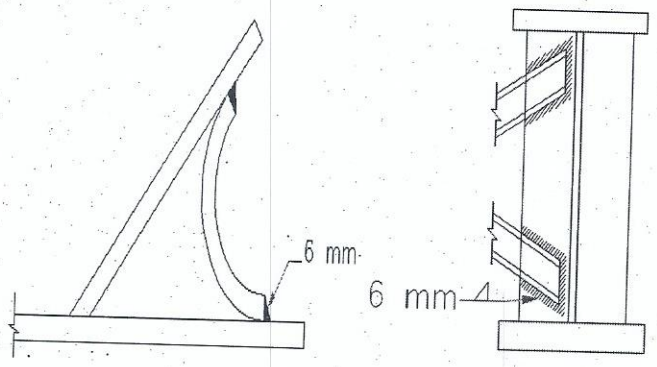

Detail 1 Ref Drg No . 10434/4
Elevation showing ISMC 150 Ref Drg No 10434/1

11.	Provision of run-on / run-off tabs	:	N.A.
12.	Cleaning of weld bead before laying next weld bead	:	By brush cleaning and grinding
13.	Root preparation before welding other side of groove weld	:	N.A.
14.	Preheating and inter pass temperature	:	110° C - 160°C
15.	Peening	:	N.A.
16.	Post Weld treatment	:	N.A.
17.	Rectification of weld defect	:	By re-welding after complete removal of defective weld& rectify the weld as per Cl.32.2 of IS 9595-96, using FCAW(Class I of IRS M 46) after rectification DP will be conducted.
18.	Inspection of Weld	:	Visual& D.P.
19.	Any other relevant Details	:	L0 jointCover PlateCross Frame ISMC 150

स०अ० अधि० / धातु एवं रसा०
Asstt. Research Officer/M&C
रेल मंत्रालय / Ministry of Railways
अ०अ०मा०सं०, लखनऊ / R.D.S.O., Lucknow
RDSO